MANUAL 01

THE KIT

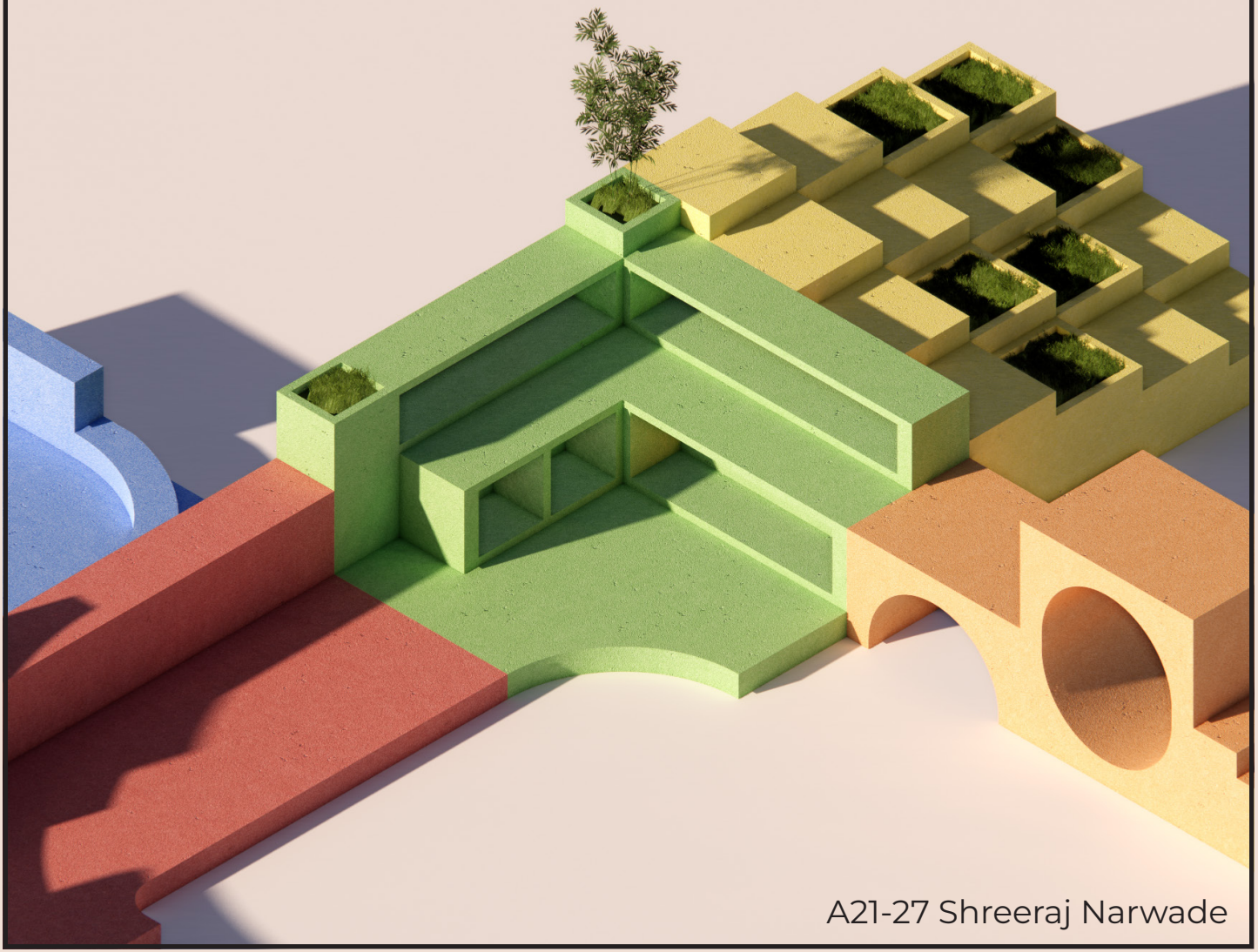

A21-27 Shreeraj Narwade

HI THERE!

This catalogue presents a system of modular pre-cast concrete elements/parts designed to structure and introduce everyday behavior in public space.

While contemporary town planning, particularly in residential layouts, prioritizes order, zoning, and efficiency, it often overlooks informal, everyday patterns of use, resulting in underutilized/abandoned and socially inactive spaces.

In response to that, each module is conceived not as a fixed object, but as an invitation, to sit, to play, to gather, to pause.

Rather than prescribing function, this system enables possibilities. Through repetition, variation, and aggregation, these parts form a flexible spatial language that adapts to different contexts, scales, and patterns of use.

The project shifts focus from form-making to behavior-making, where space is defined not just by what is built, but by how it is used.

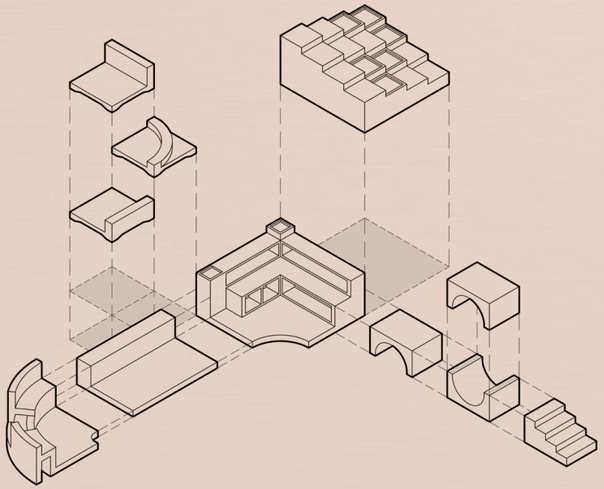

HOW IT WORKS

The ‘KIT’ is composed of a series of modules, each designed to support a specific behavioral condition. These elements can be used individually or combined to form larger spatial configurations.

Modules are categorized by action, i.e., sit, play, perform, balance, read, refresh, and support, forming a behavioral framework rather than a fixed program.

HOW TO READ THE CATALOGUE

Each module is identified through a coded system and described using two sets of information:

1. **Core Specifications:** dimensions, material, weight, and cost.
2. **Functional Specifications:** capacity, usage, finish options, and variations.

Usage diagrams illustrate how each module supports different interactions, while dimension logic demonstrates the scale of the module.

1. TO BALANCE

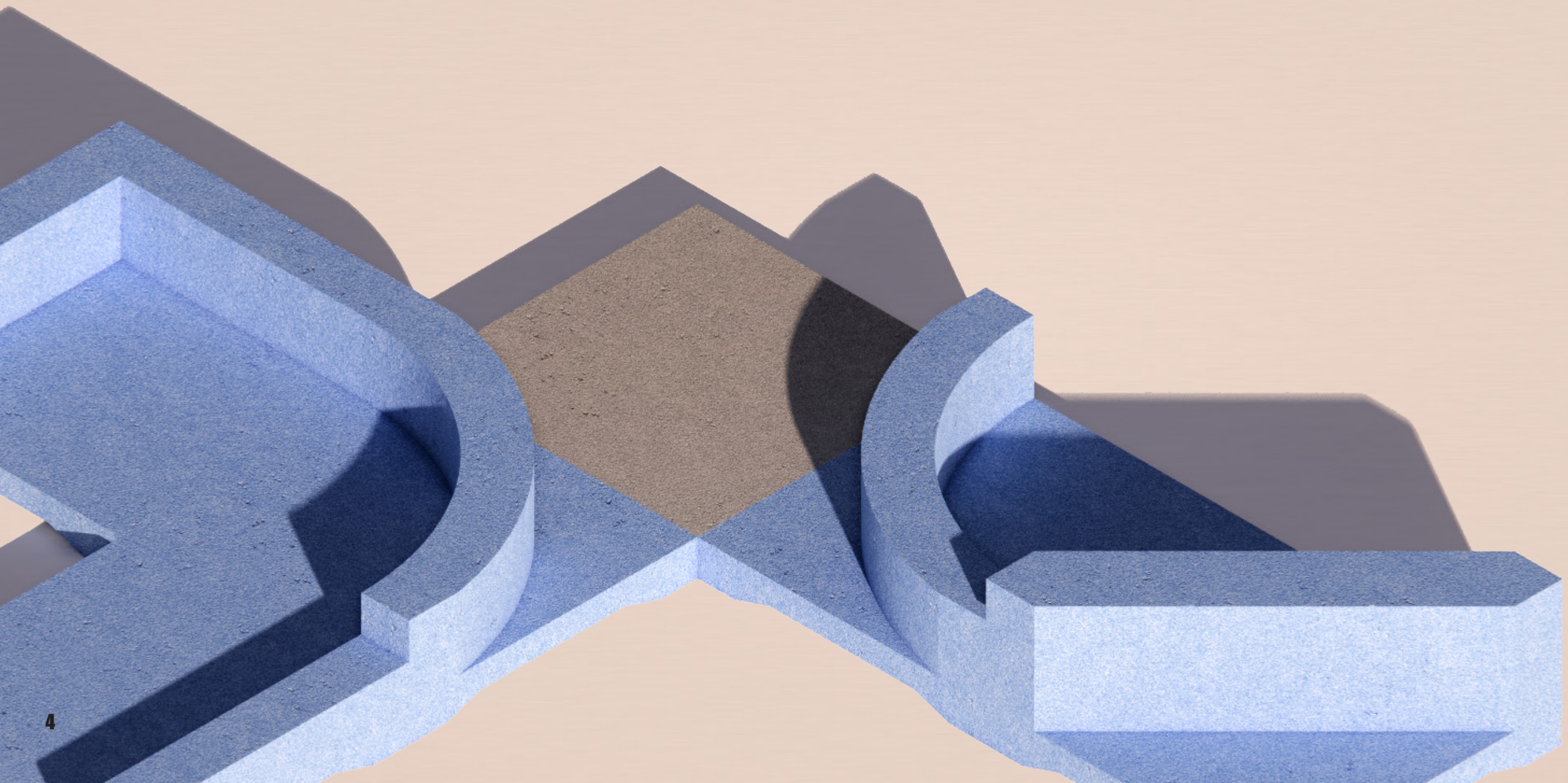

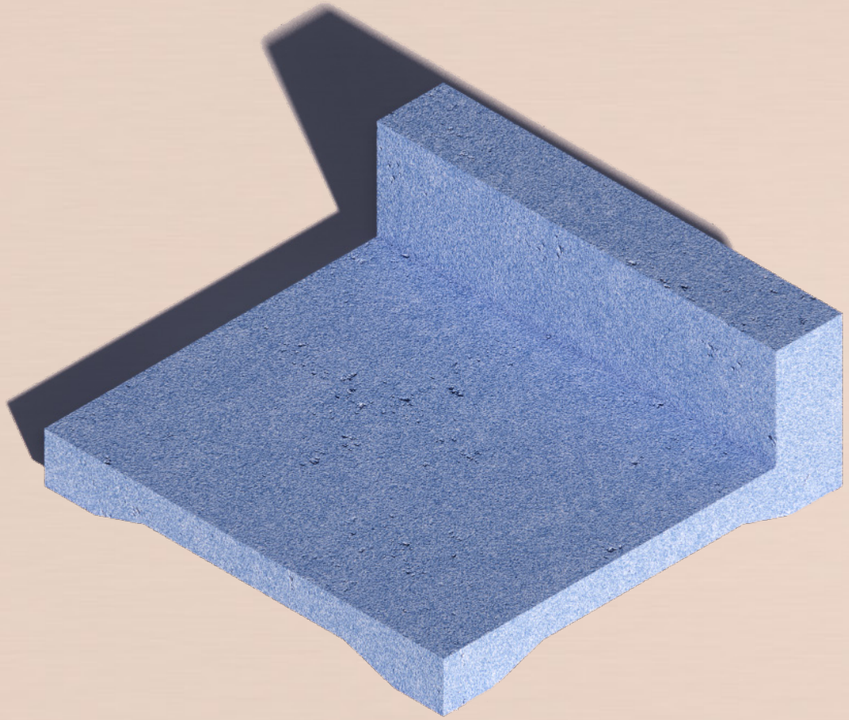

1.1

CORE SPECIFICATIONS

DIMENSIONS	1200MM X 1200MM X 300MM
WEIGHT	~350-500 KGS
MATERIAL	PRE-CAST RCC
PRICE	₹3,000 – ₹3,500

FUNCTIONAL SPECIFICATIONS

HEIGHT VARIATIONS	150, 300, 450, 600MM
FINISH OPTIONS	COLOR PIGMENT, SMOOTH, ANTI-SKID
USER CAPACITY	1-3
LOAD CAPACITY	800-1200 KGS

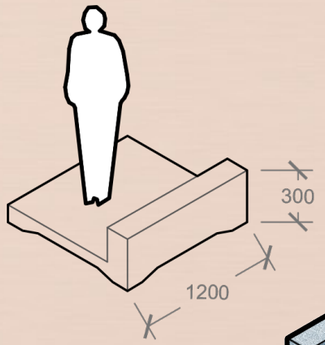



USAGE

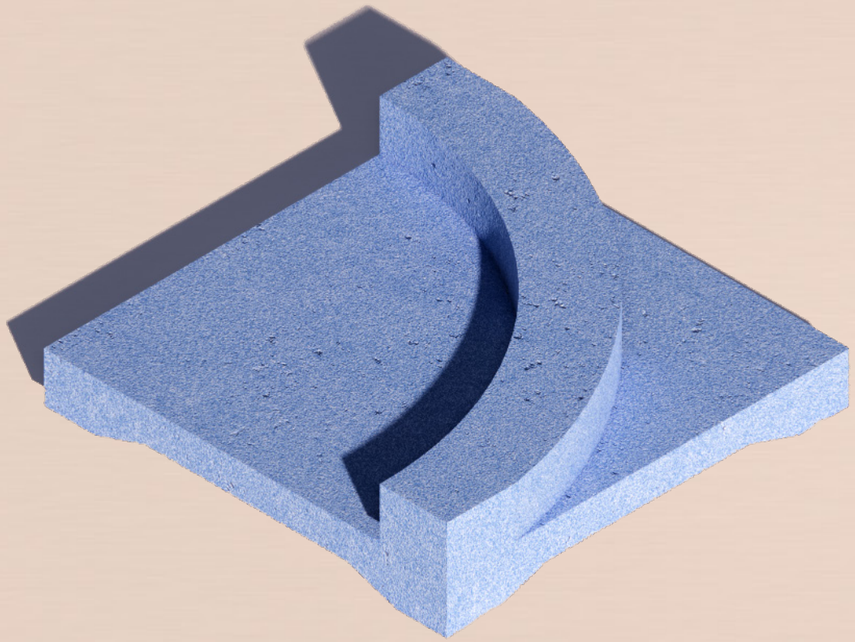

1.2

CORE SPECIFICATIONS

DIMENSIONS	1200MM X 1200MM X 300MM
WEIGHT	~350-500 KGS
MATERIAL	PRE-CAST RCC
PRICE	₹3,000 – ₹3,500

FUNCTIONAL SPECIFICATIONS

HEIGHT VARIATIONS	150, 300, 450, 600MM
FINISH OPTIONS	COLOR PIGMENT, SMOOTH, ANTI-SKID
USER CAPACITY	1-3
LOAD CAPACITY	800-1200 KGS

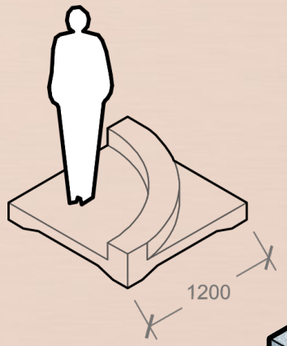



USAGE

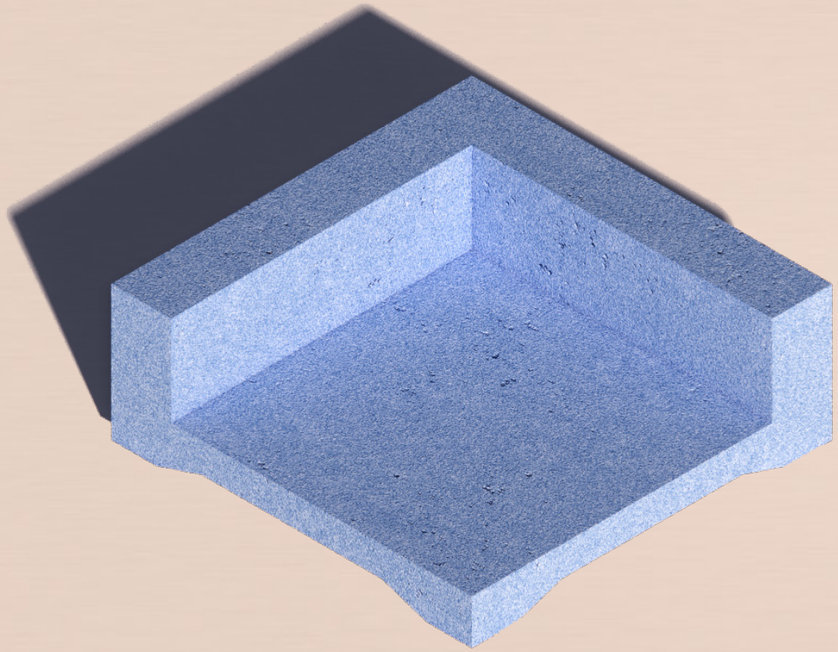

1.3

CORE SPECIFICATIONS

DIMENSIONS	1200MM X 1200MM X 300MM
WEIGHT	~350-500 KGS
MATERIAL	PRE-CAST RCC
PRICE	₹3,000 – ₹3,500

FUNCTIONAL SPECIFICATIONS

HEIGHT VARIATIONS	150, 300, 450, 600MM
FINISH OPTIONS	COLOR PIGMENT, SMOOTH, ANTI-SKID
USER CAPACITY	1-3
LOAD CAPACITY	800-1200 KGS

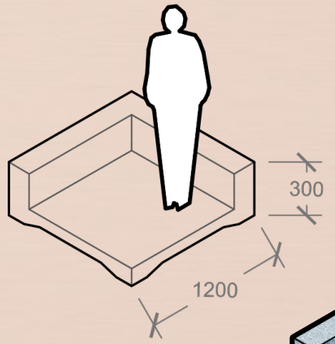



USAGE

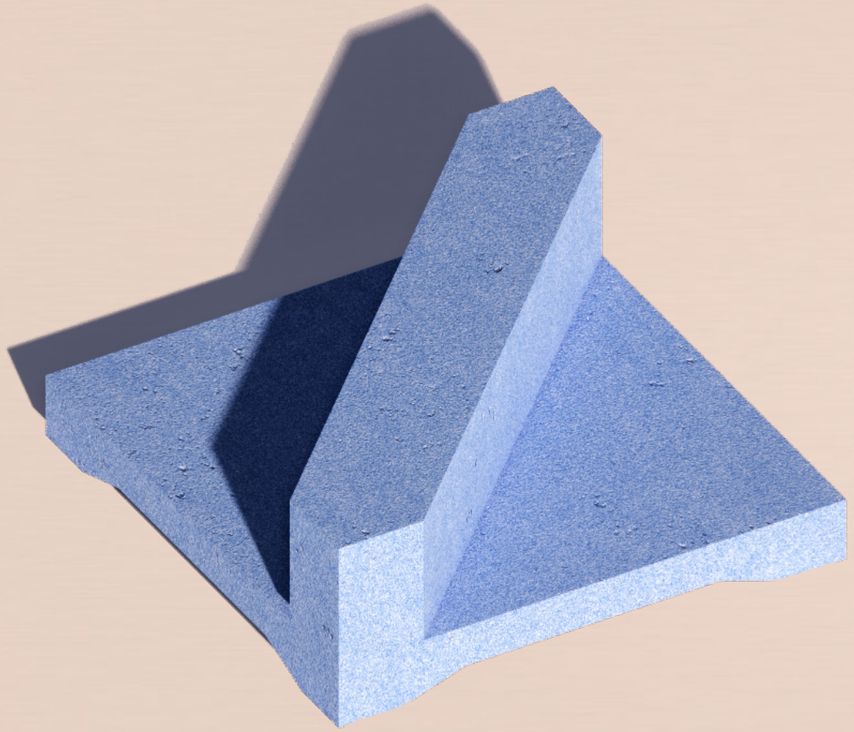

1.4

CORE SPECIFICATIONS

DIMENSIONS	1200MM X 1200MM X 450MM
WEIGHT	~350-500 KGS
MATERIAL	PRE-CAST RCC
PRICE	₹3,000 – ₹3,500

FUNCTIONAL SPECIFICATIONS

HEIGHT VARIATIONS	150, 300, 450, 600MM
FINISH OPTIONS	COLOR PIGMENT, SMOOTH, ANTI-SKID
USER CAPACITY	1-3
LOAD CAPACITY	800-1200 KGS

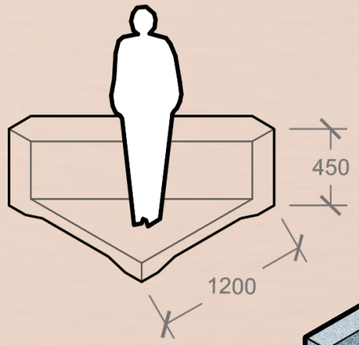



USAGE

2. TO PERFORM

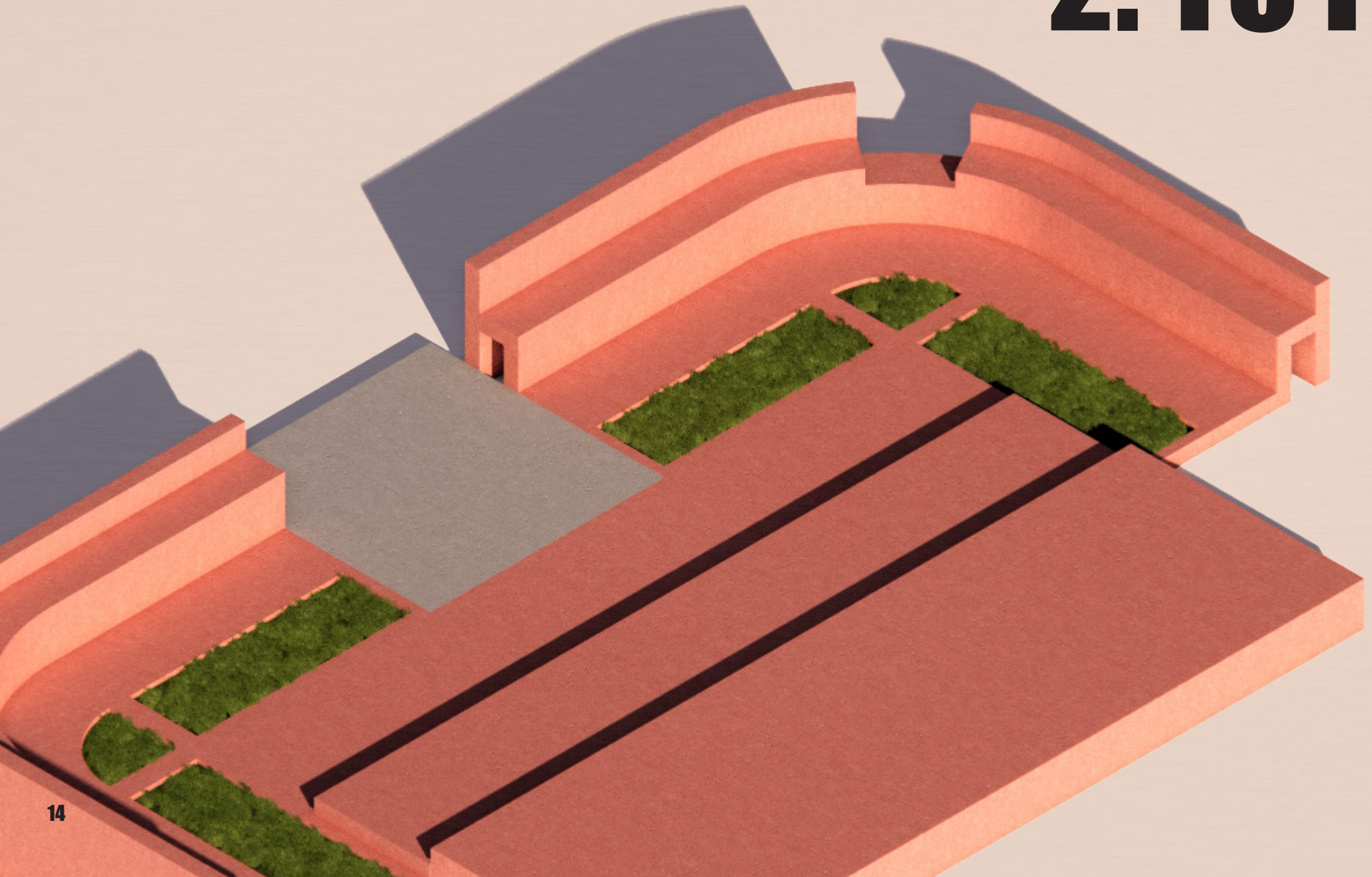

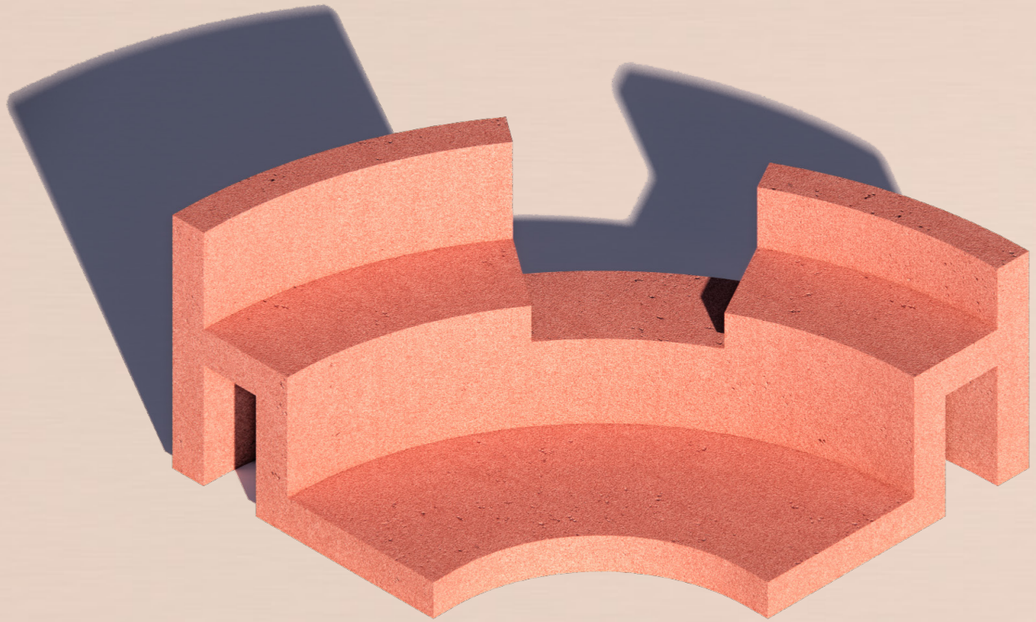

2.1

CORE SPECIFICATIONS

DIMENSIONS	2400MM X 2400MM X 1050MM
WEIGHT	~1-1.5 TONNE
MATERIAL	PRE-CAST RCC
PRICE	₹7,500 – ₹11,500

FUNCTIONAL SPECIFICATIONS

FINISH OPTIONS	COLOR PIGMENT, SMOOTH, ANTI-SKID
USER CAPACITY	4-6
LOAD CAPACITY	1500-2000 KGS

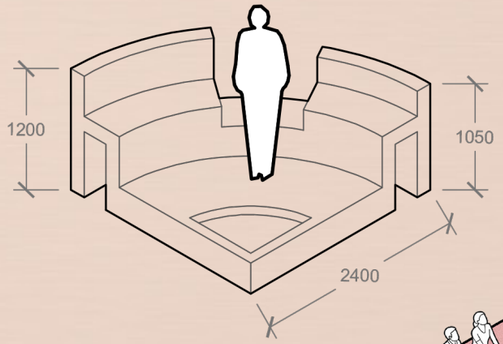

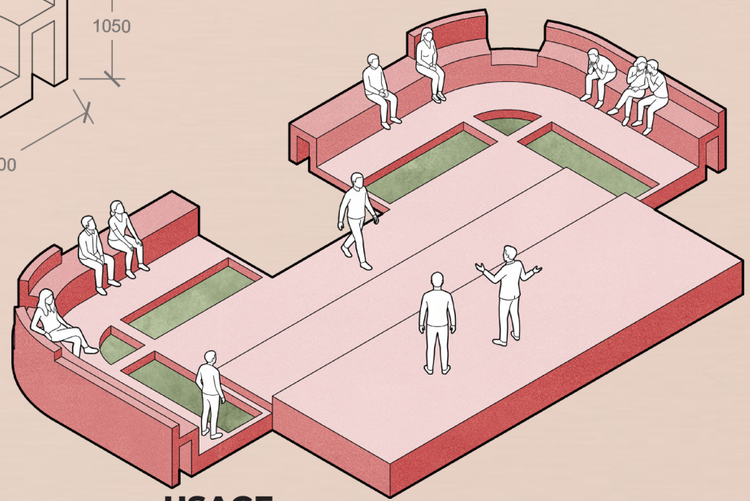

USAGE

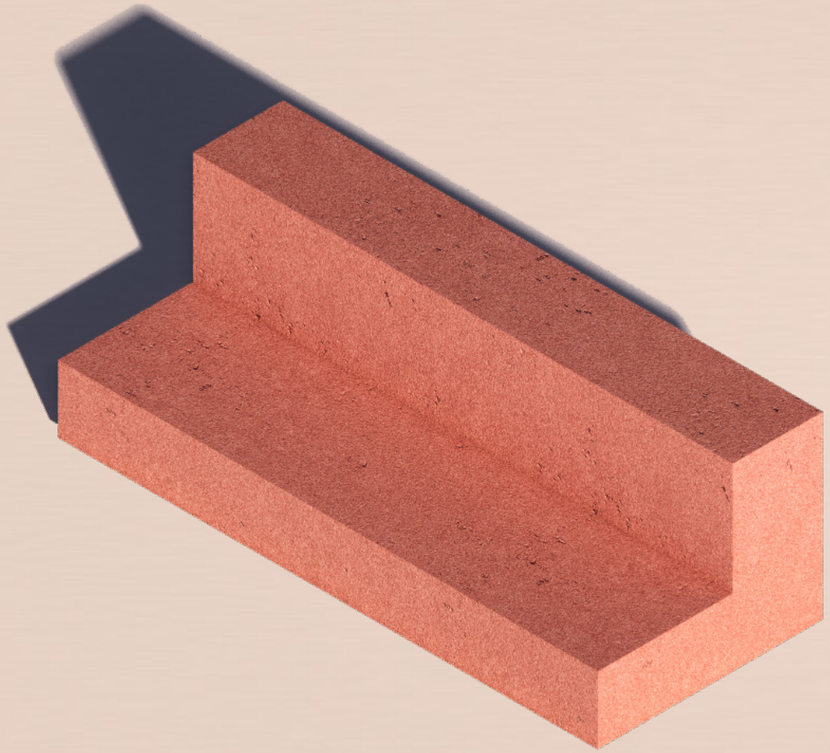

2.2

CORE SPECIFICATIONS

DIMENSIONS	2400MM X 1000MM X 800MM
WEIGHT	~800-900 KGS
MATERIAL	PRE-CAST RCC
PRICE	₹5,000 – ₹7,500

FUNCTIONAL SPECIFICATIONS

FINISH OPTIONS	COLOR PIGMENT, SMOOTH, ANTI-SKID
USER CAPACITY	4-6
LOAD CAPACITY	1000-1500 KGS

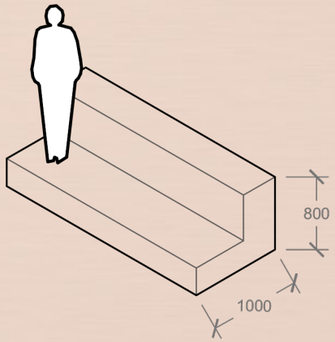

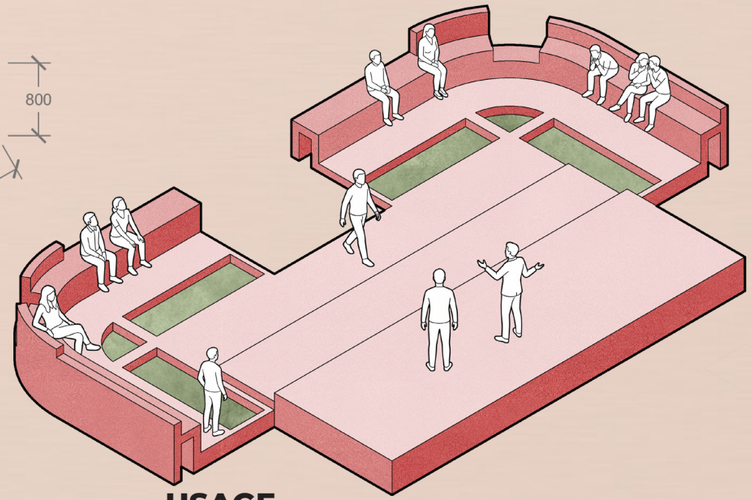

USAGE

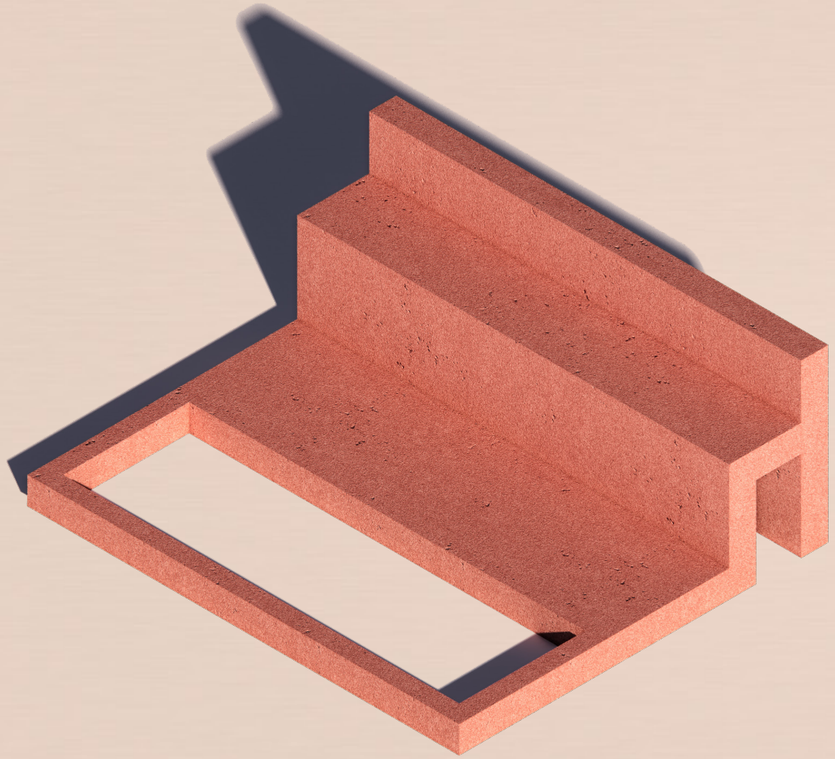

2.3

CORE SPECIFICATIONS

DIMENSIONS	2400MM X 2050MM X 1100MM
WEIGHT	~1-2 TONNE
MATERIAL	PRE-CAST RCC
PRICE	₹10,000 – ₹13,500

FUNCTIONAL SPECIFICATIONS

HEIGHT VARIATIONS	0.15, 0.3, 0.45, 0.6, 0.75M
FINISH OPTIONS	COLOR PIGMENT, SMOOTH, ANTI-SKID
USER CAPACITY	4-6
LOAD CAPACITY	1500-2000 KGS

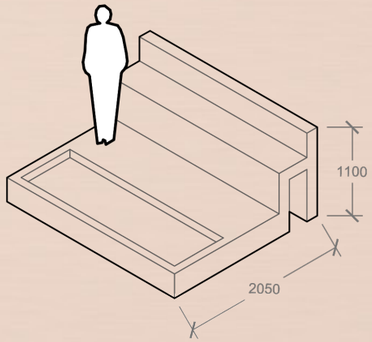

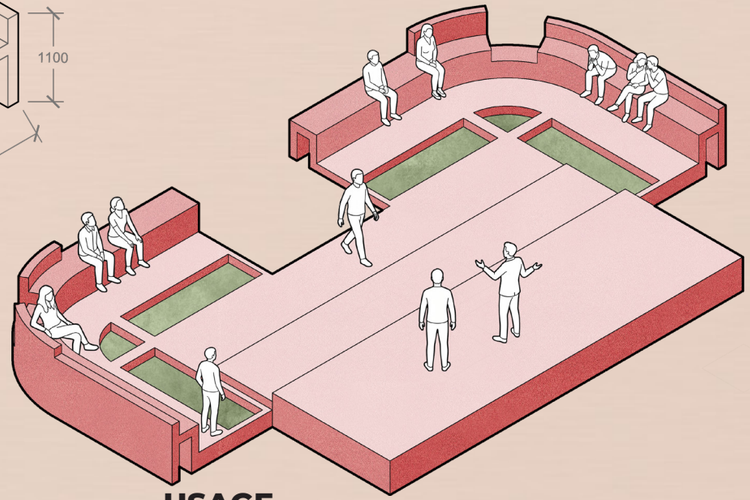

USAGE

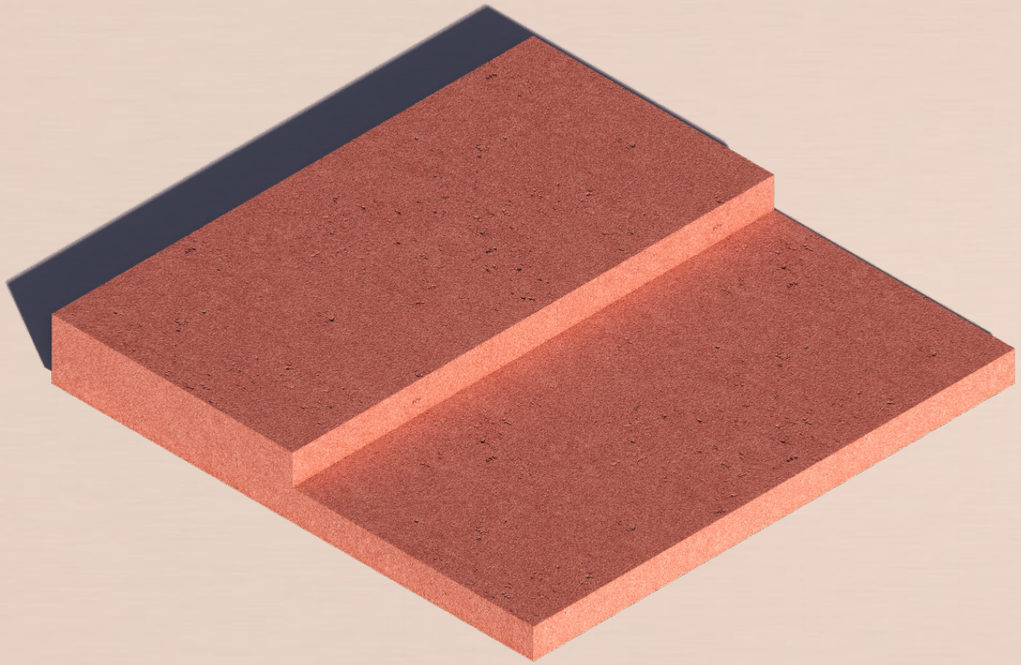

2.4

CORE SPECIFICATIONS

DIMENSIONS	2400MM X 2400MM X 300MM
WEIGHT	~1.5-2 TONNE
MATERIAL	PRE-CAST RCC
PRICE	₹13,000 – ₹15,500

FUNCTIONAL SPECIFICATIONS

FINISH OPTIONS	COLOR PIGMENT, SMOOTH, ANTI-SKID
USER CAPACITY	6-8
LOAD CAPACITY	2000-3000 KGS

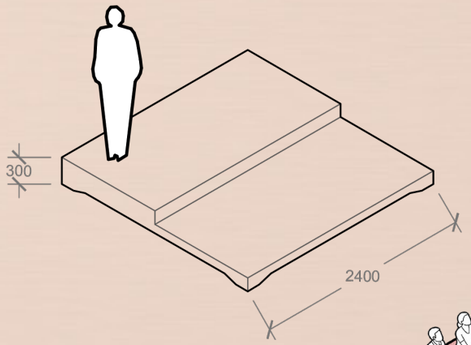

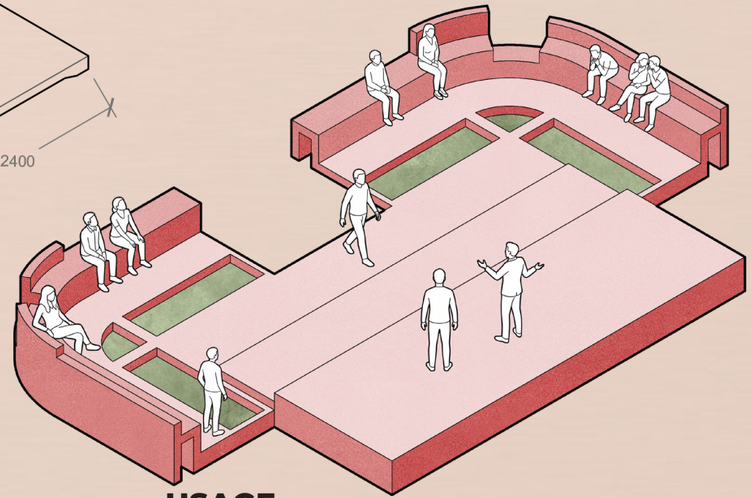

USAGE

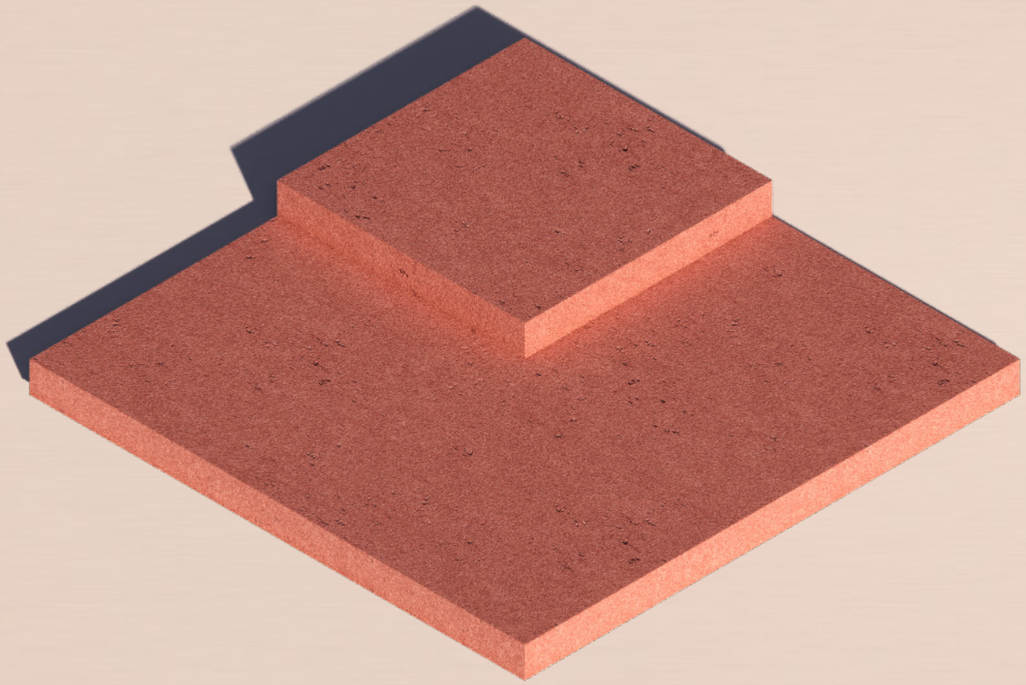

2.5

CORE SPECIFICATIONS

DIMENSIONS	2400MM X 2400MM X 300MM
WEIGHT	~1.5-2 TONNE
MATERIAL	PRE-CAST RCC
PRICE	₹13,000 – ₹15,500

FUNCTIONAL SPECIFICATIONS

FINISH OPTIONS	COLOR PIGMENT, SMOOTH, ANTI-SKID
USER CAPACITY	6-8
LOAD CAPACITY	2000-3000 KGS

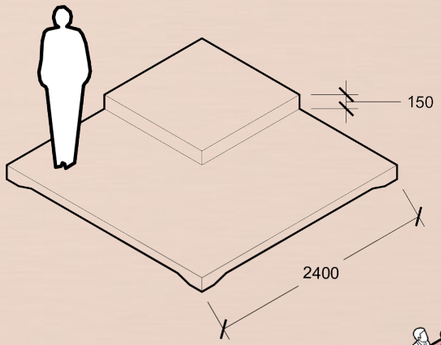

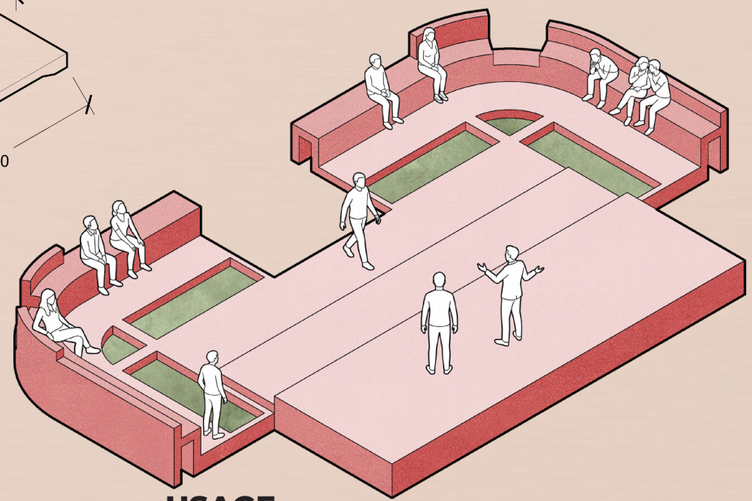

USAGE

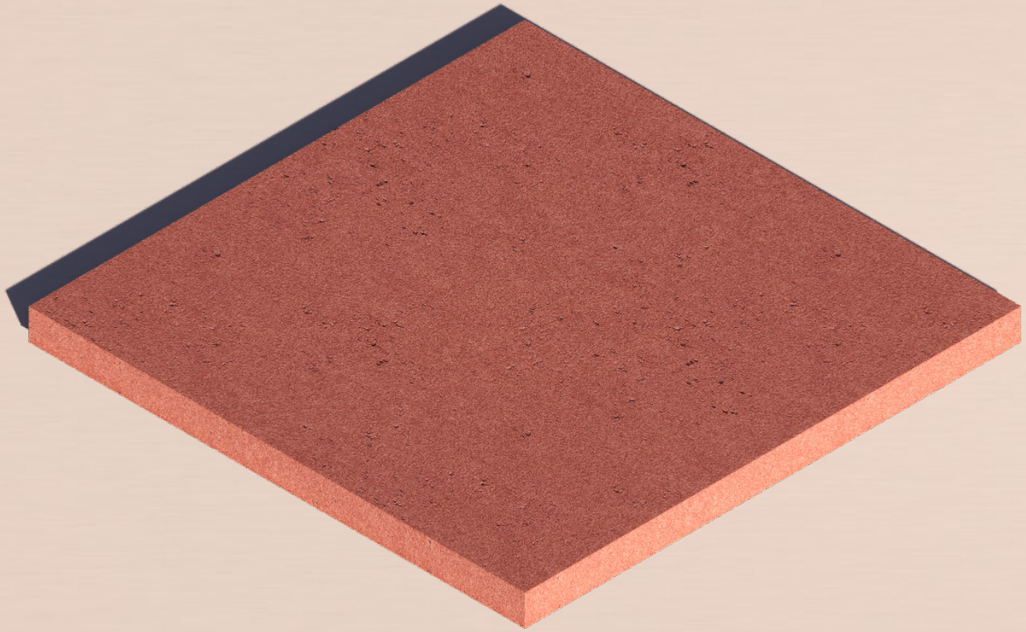

2.6

CORE SPECIFICATIONS

DIMENSIONS	2400MM X 2400MM X 300MM
WEIGHT	~1.5-2 TONNE
MATERIAL	PRE-CAST RCC
PRICE	₹13,000 – ₹15,500

FUNCTIONAL SPECIFICATIONS

FINISH OPTIONS	COLOR PIGMENT, SMOOTH, ANTI-SKID
USER CAPACITY	6-8
LOAD CAPACITY	2000-3000 KGS

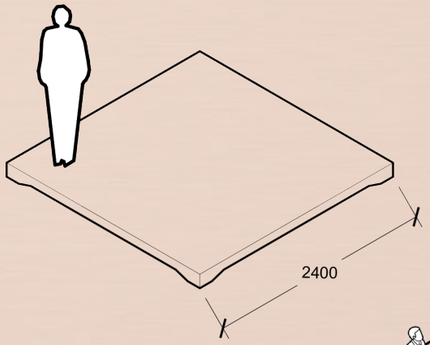

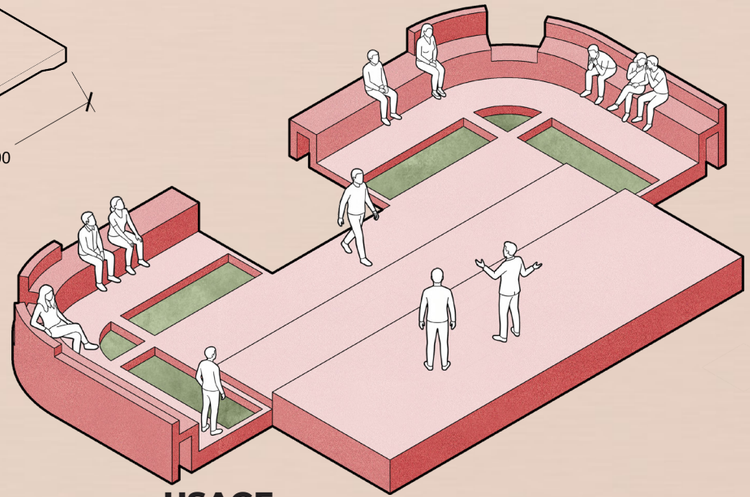

USAGE

3. TO SIT

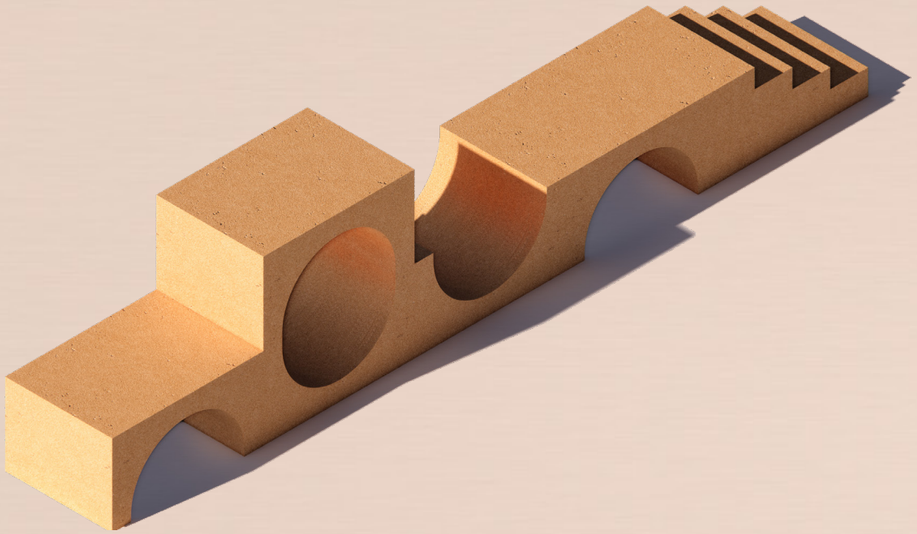



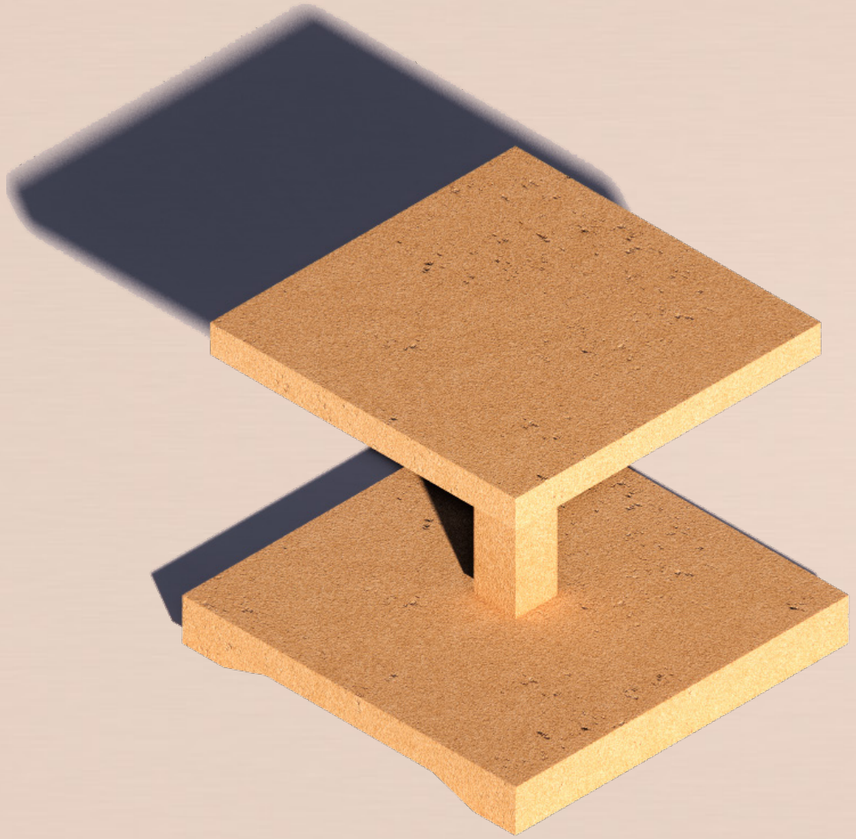

3.1

CORE SPECIFICATIONS

DIMENSIONS	1200MM X 1200MM X 1000MM
WEIGHT	~320-450 KGS
MATERIAL	PRE-CAST RCC
PRICE	₹4,000 – ₹5,500

FUNCTIONAL SPECIFICATIONS

FINISH OPTIONS	COLOR PIGMENT, SMOOTH, ANTI-SKID
USER CAPACITY	1-2
LOAD CAPACITY	800-1200 KGS

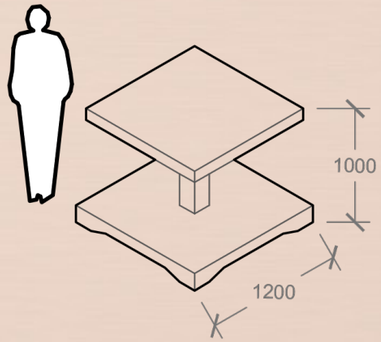

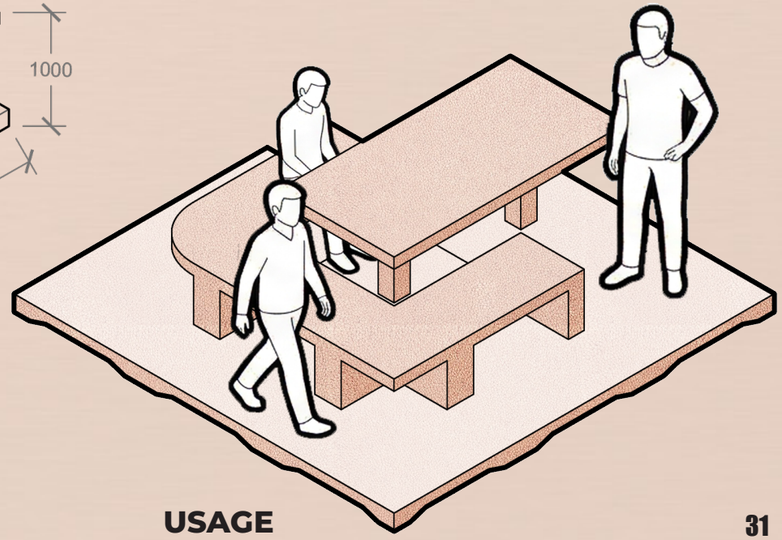

USAGE

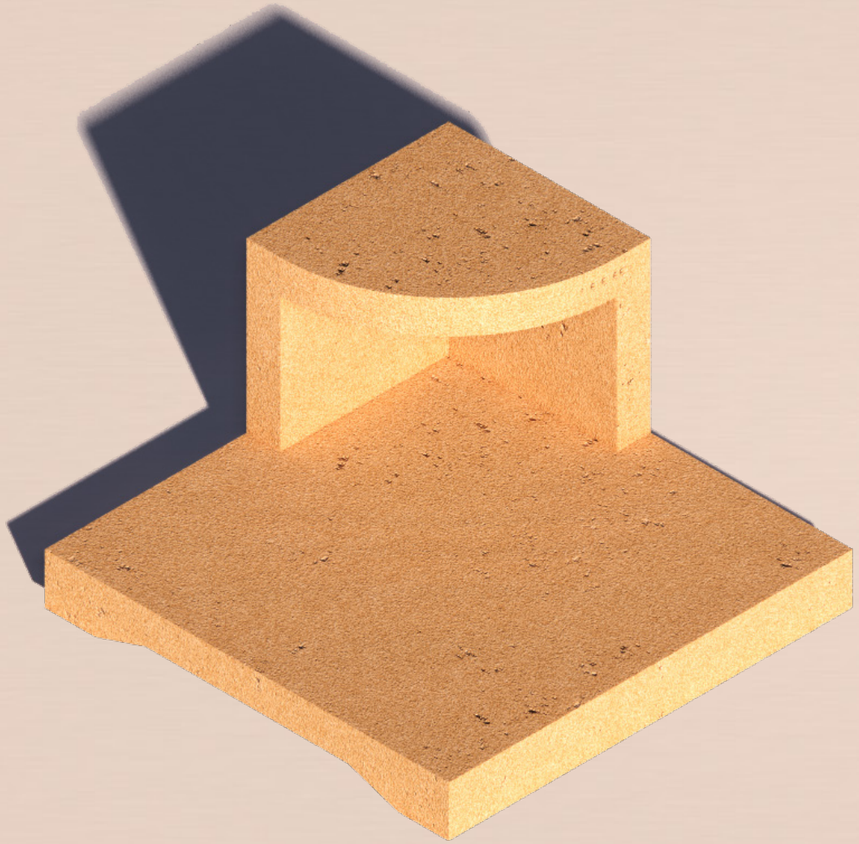

3.2

CORE SPECIFICATIONS

DIMENSIONS	1200MM X 1200MM X 500MM
WEIGHT	~300-350 KGS
MATERIAL	PRE-CAST RCC
PRICE	₹4,000 – ₹5,500

FUNCTIONAL SPECIFICATIONS

FINISH OPTIONS	COLOR PIGMENT, SMOOTH, ANTI-SKID
USER CAPACITY	1-2
LOAD CAPACITY	800-1200 KGS

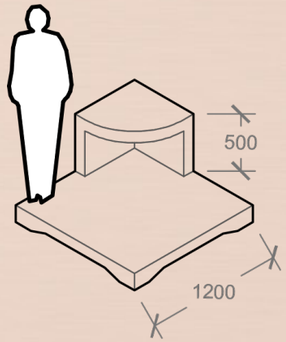

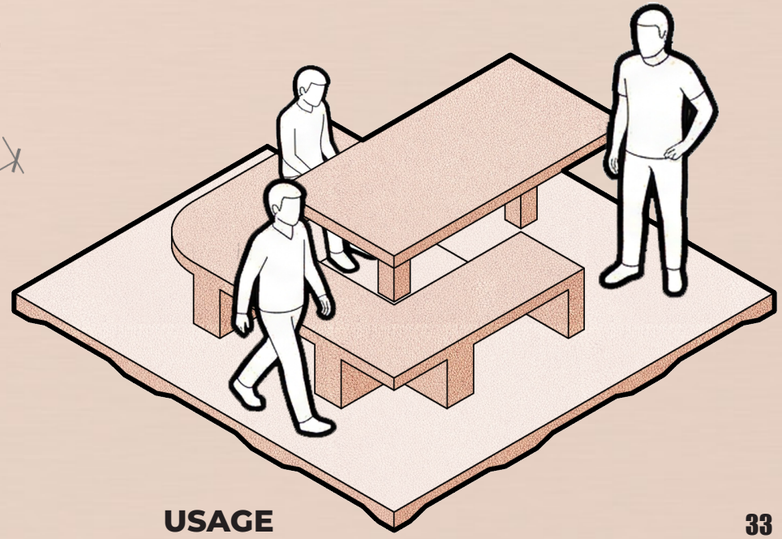

USAGE

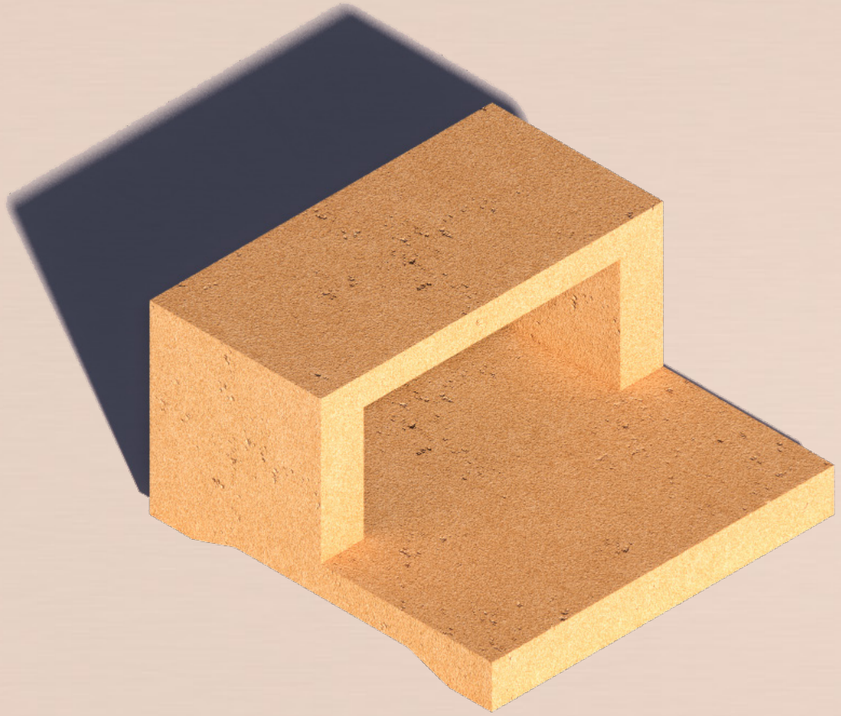

3.3

CORE SPECIFICATIONS

DIMENSIONS	1200MM X 1200MM X 500MM
WEIGHT	~320-450 KGS
MATERIAL	PRE-CAST RCC
PRICE	₹4,5000 – ₹5,500

FUNCTIONAL SPECIFICATIONS

FINISH OPTIONS	COLOR PIGMENT, SMOOTH, ANTI-SKID
USER CAPACITY	2-3
LOAD CAPACITY	1000-1500 KGS

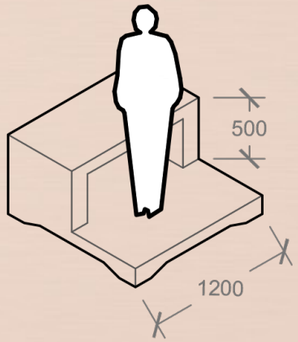

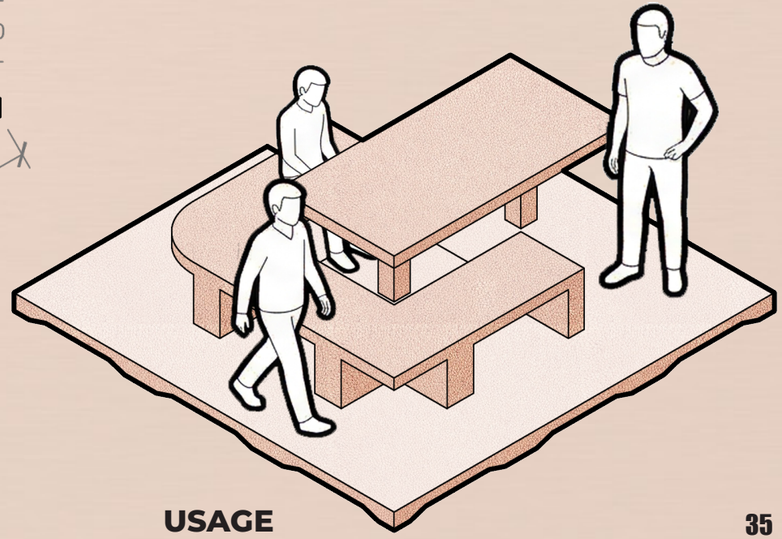

USAGE

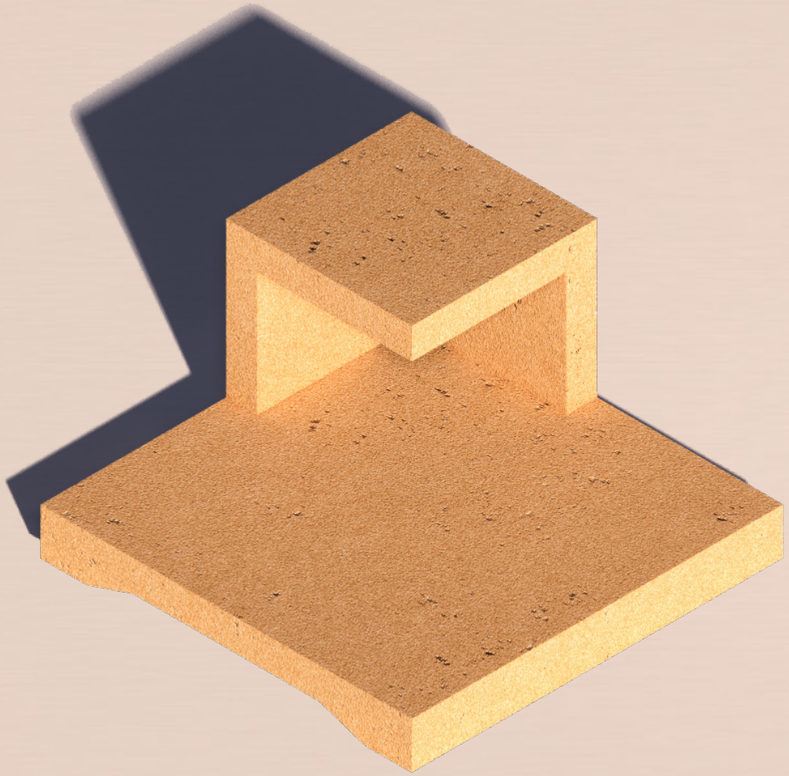

3.4

CORE SPECIFICATIONS

DIMENSIONS	1200MM X 1200MM X 500MM
WEIGHT	~300-350 KGS
MATERIAL	PRE-CAST RCC
PRICE	₹4,000 – ₹5,500

FUNCTIONAL SPECIFICATIONS

FINISH OPTIONS	COLOR PIGMENT, SMOOTH, ANTI-SKID
USER CAPACITY	1-2
LOAD CAPACITY	800-1200 KGS

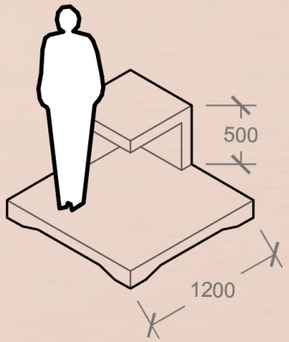

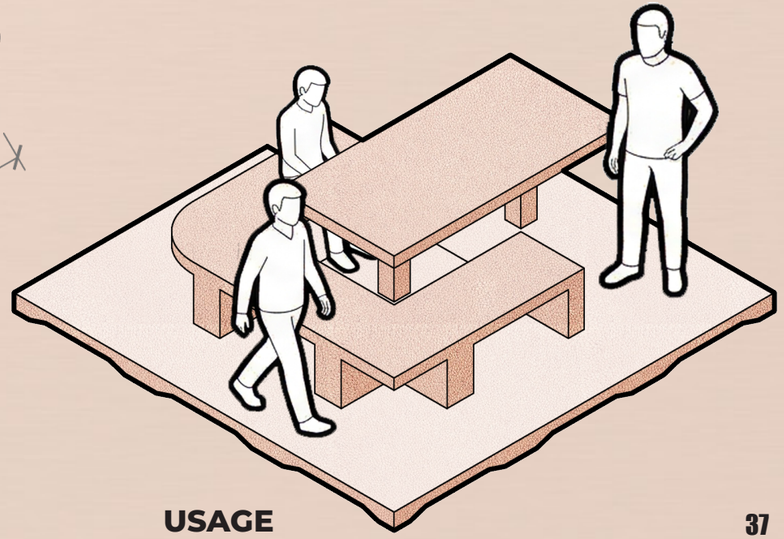

USAGE

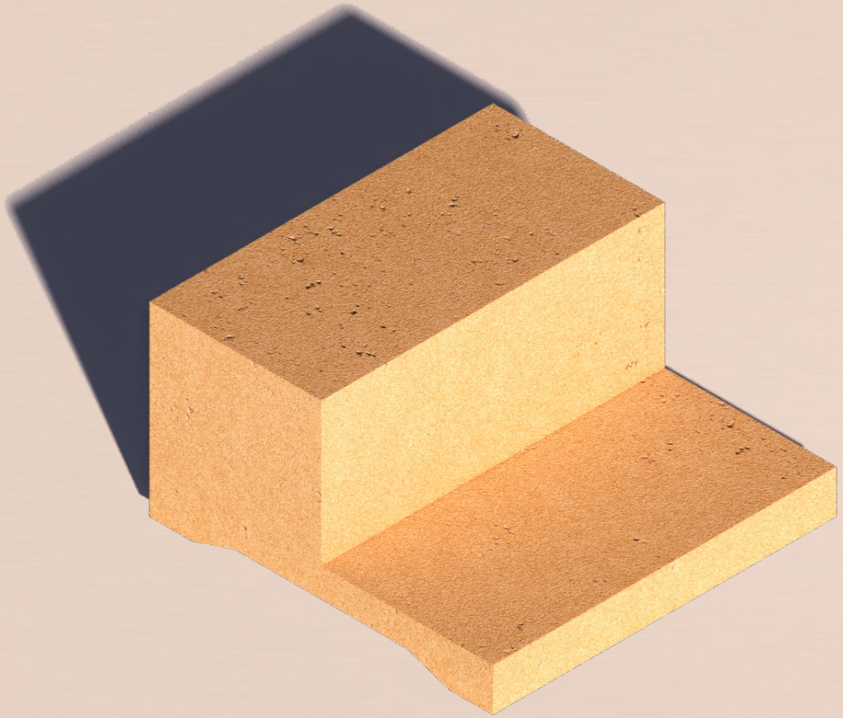

3.5

CORE SPECIFICATIONS

DIMENSIONS	1200MM X 1200MM X 500MM
WEIGHT	~400-550 KGS
MATERIAL	PRE-CAST RCC
PRICE	₹5,000 – ₹6,500

FUNCTIONAL SPECIFICATIONS

FINISH OPTIONS	COLOR PIGMENT, SMOOTH, ANTI-SKID
USER CAPACITY	2-3
LOAD CAPACITY	1000-2000 KGS

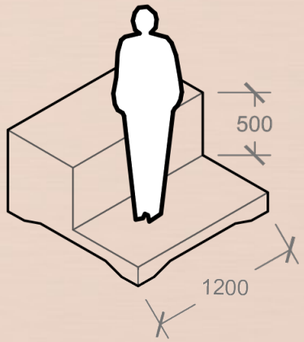

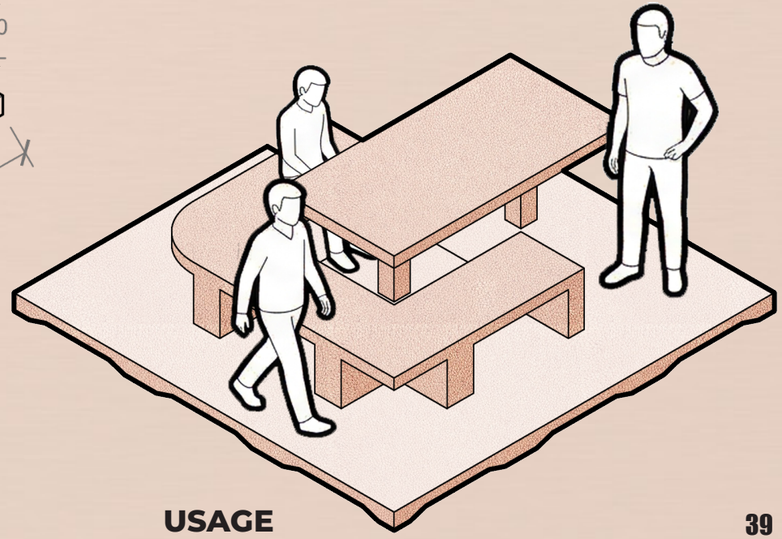

USAGE

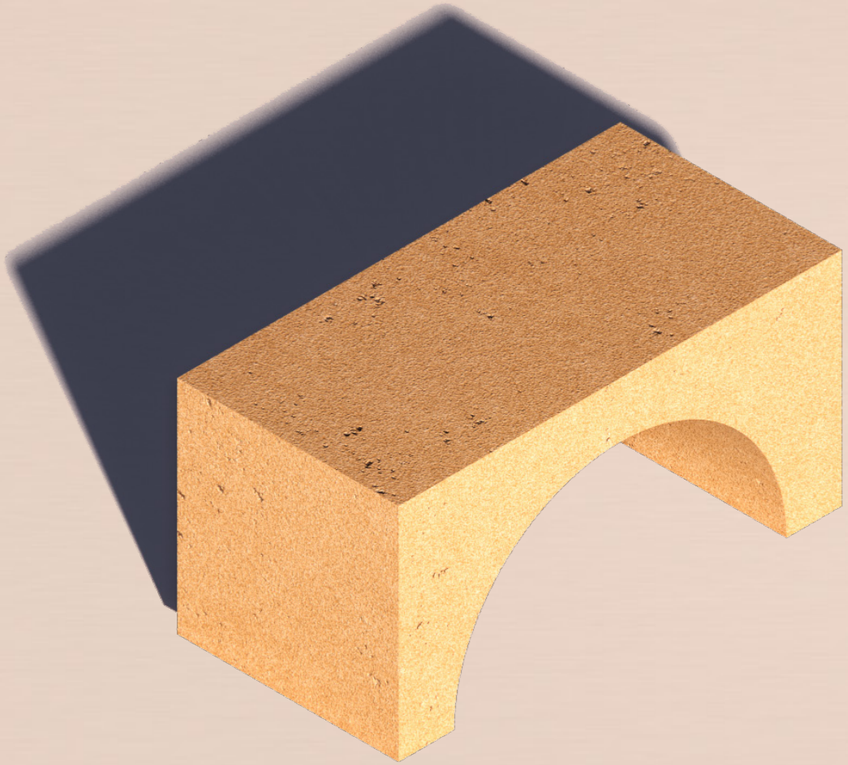

3.6

CORE SPECIFICATIONS

DIMENSIONS	1200MM X 600MM X 600MM
WEIGHT	~250-300 KGS
MATERIAL	PRE-CAST RCC
PRICE	₹3,000 – ₹4,500

FUNCTIONAL SPECIFICATIONS

FINISH OPTIONS	COLOR PIGMENT, SMOOTH, ANTI-SKID
USER CAPACITY	1-2
LOAD CAPACITY	6000-1000 KGS

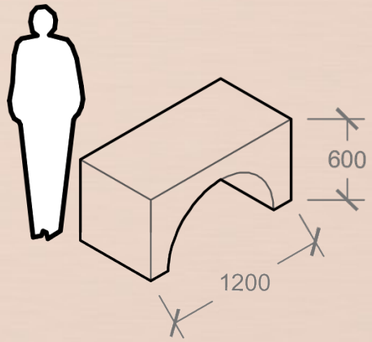

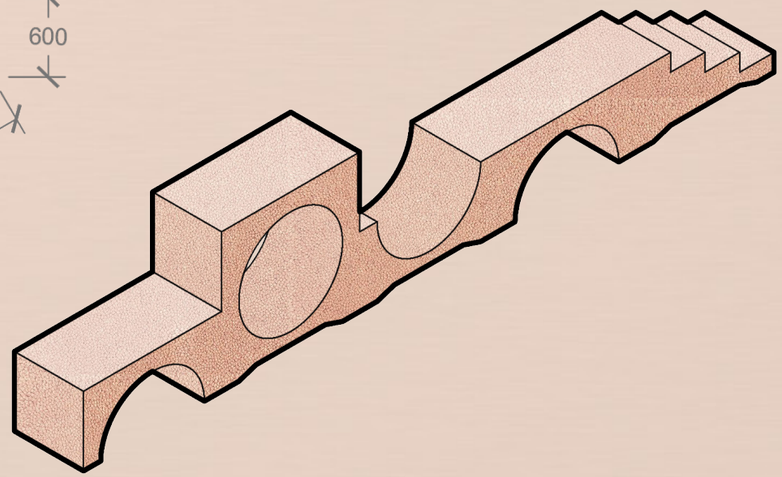

USAGE

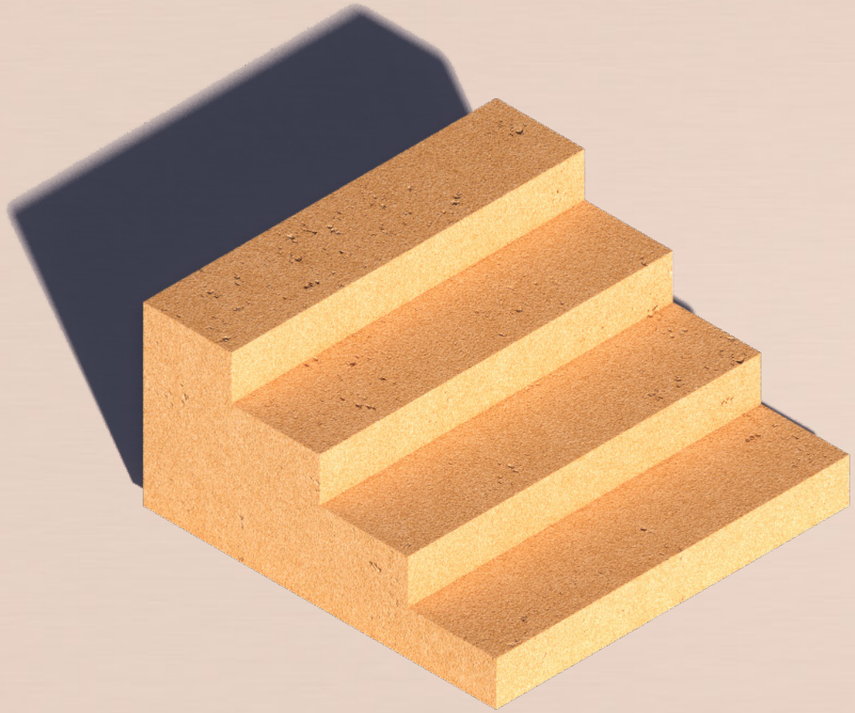

3.7

CORE SPECIFICATIONS

DIMENSIONS	2400MM X 2400MM X 300MM
WEIGHT	~350-400 KGS
MATERIAL	PRE-CAST RCC
PRICE	₹4,000 – ₹5,500

FUNCTIONAL SPECIFICATIONS

FINISH OPTIONS	COLOR PIGMENT, SMOOTH, ANTI-SKID
USER CAPACITY	2-3
LOAD CAPACITY	800-1200 KGS

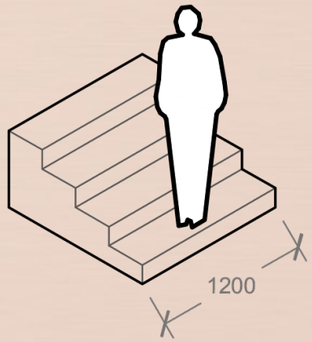

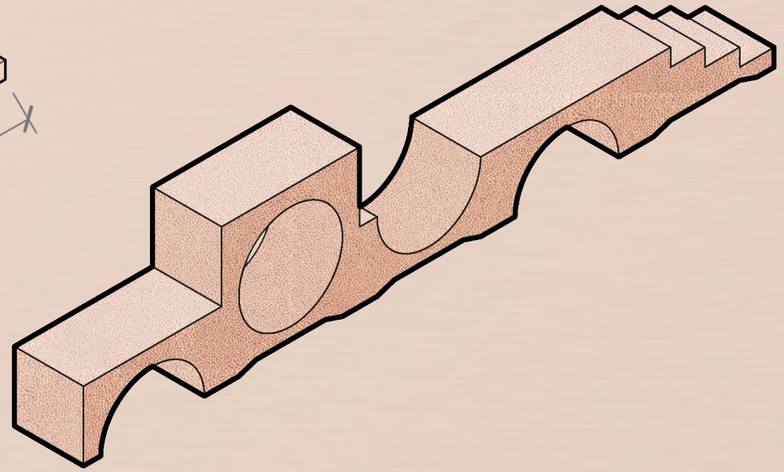

USAGE

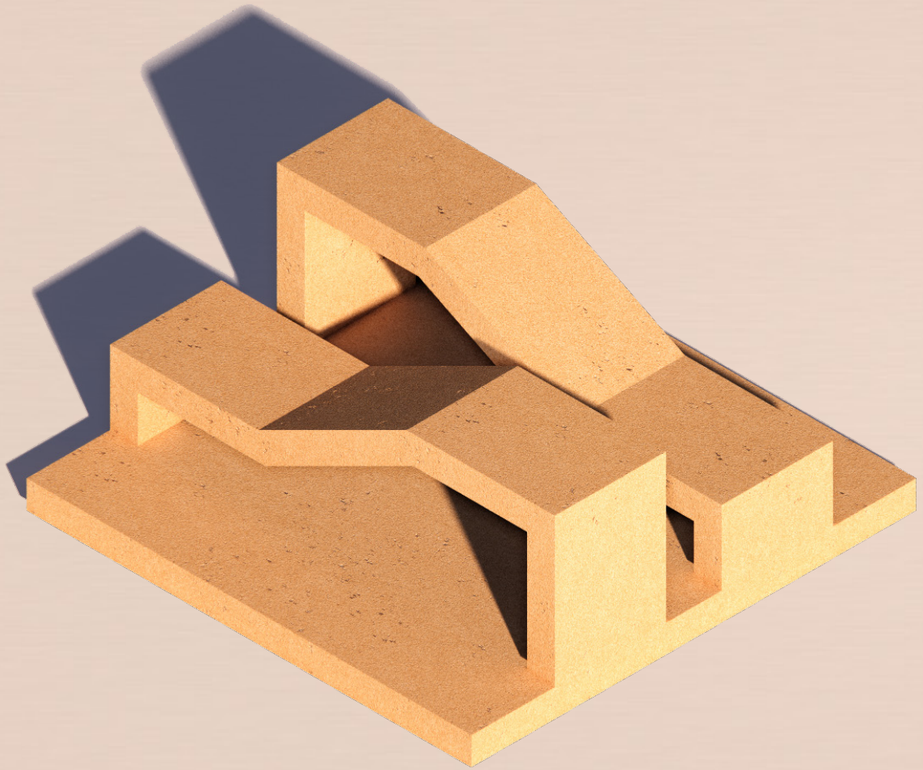

3.8

CORE SPECIFICATIONS

DIMENSIONS	2400MM X 2400MM X 600MM
WEIGHT	~1.5-2 TONNE
MATERIAL	PRE-CAST RCC
PRICE	₹13,000 – ₹15,500

FUNCTIONAL SPECIFICATIONS

FINISH OPTIONS	COLOR PIGMENT, SMOOTH, ANTI-SKID
USER CAPACITY	6-8
LOAD CAPACITY	2000-3000 KGS

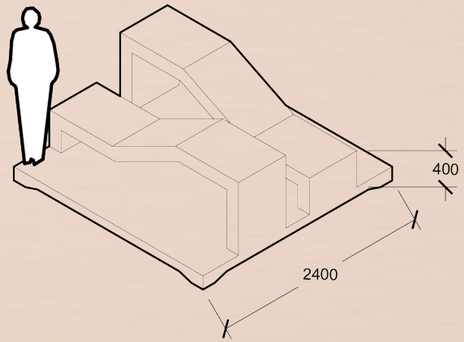

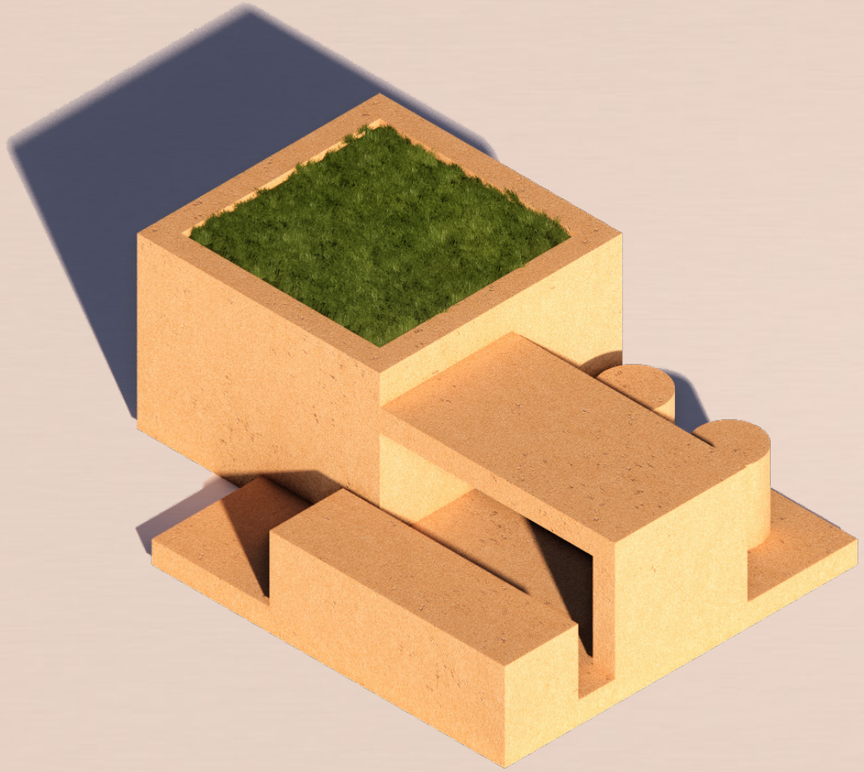

3.9

CORE SPECIFICATIONS

DIMENSIONS	2400MM X 2400MM X 300MM
WEIGHT	~2-3 TONNE
MATERIAL	PRE-CAST RCC
PRICE	₹13,000 – ₹15,500

FUNCTIONAL SPECIFICATIONS

FINISH OPTIONS	COLOR PIGMENT, SMOOTH, ANTI-SKID
USER CAPACITY	4-6
LOAD CAPACITY	2000-3000 KGS

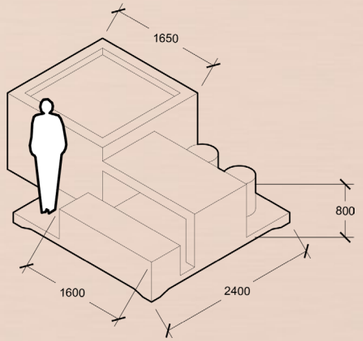

4. TO READ

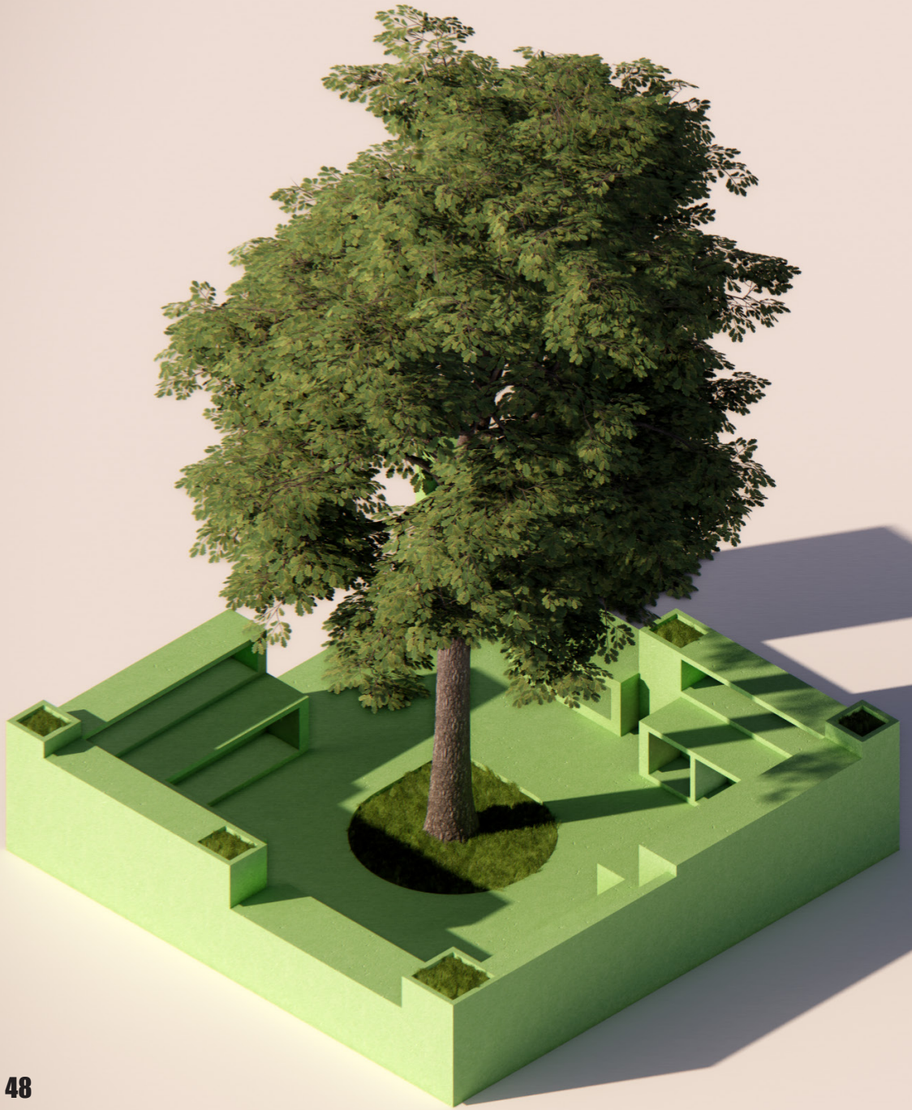

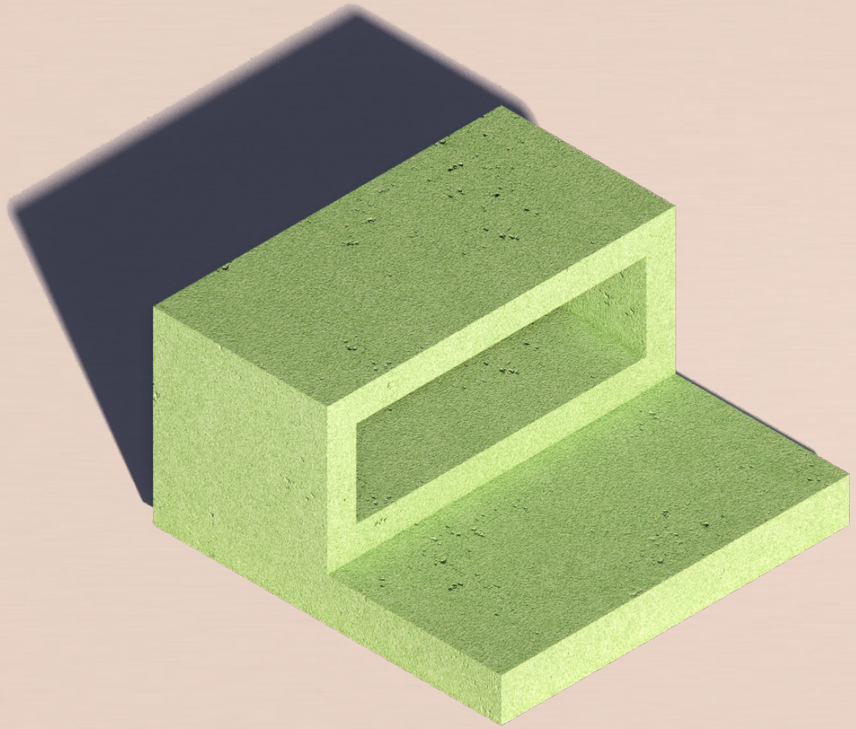

4.1

CORE SPECIFICATIONS

DIMENSIONS	1200MM X 1200MM X 500MM
WEIGHT	~800-950 KGS
MATERIAL	PRE-CAST RCC
PRICE	₹7,000 – ₹8,500

FUNCTIONAL SPECIFICATIONS

FINISH OPTIONS	COLOR PIGMENT, SMOOTH, ANTI-SKID
USER CAPACITY	2-3
LOAD CAPACITY	1000-2000 KGS

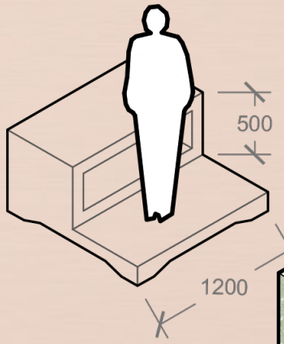

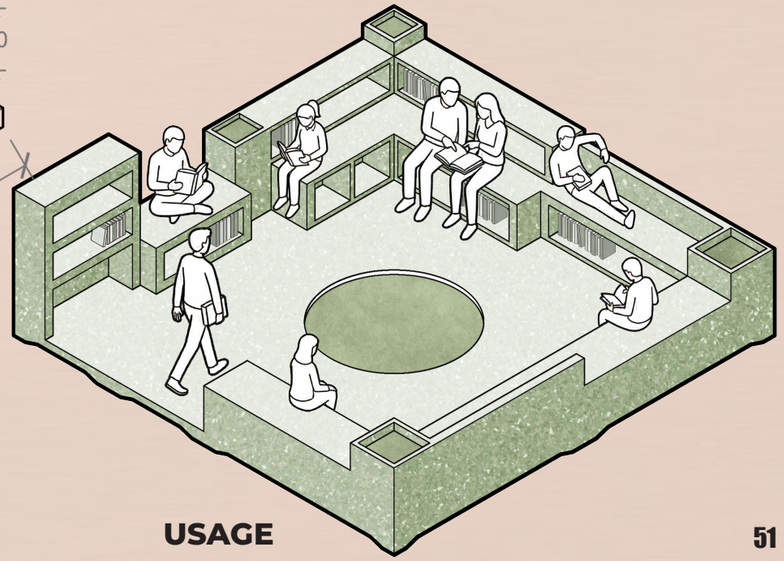

USAGE

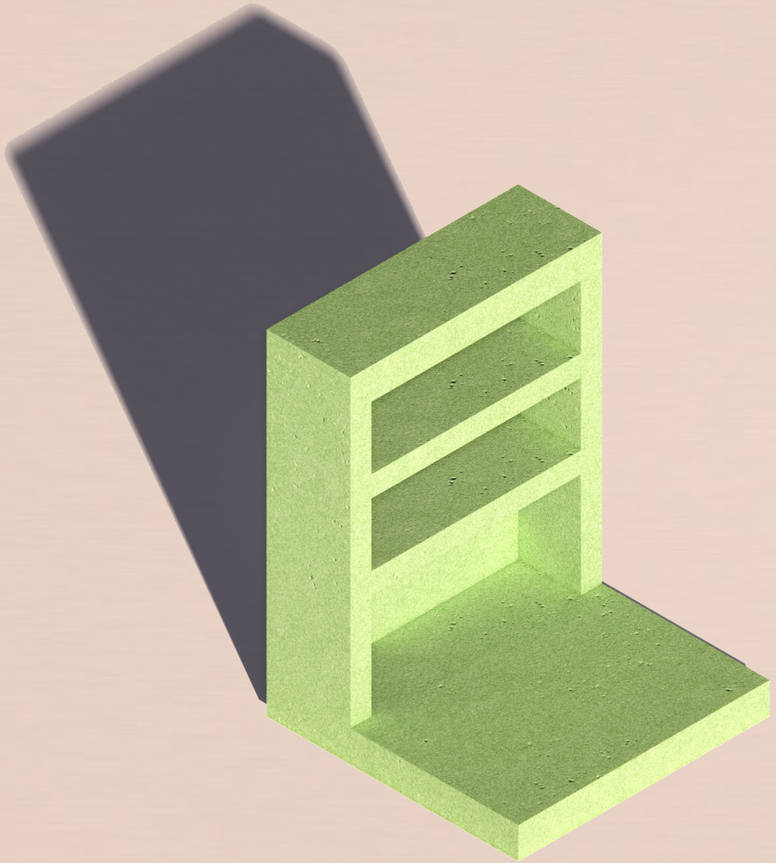

4.2

CORE SPECIFICATIONS

DIMENSIONS	1200MM X 1200MM X 1400MM
WEIGHT	~1-1.5 TONNE
MATERIAL	PRE-CAST RCC
PRICE	₹14,000 – ₹16,500

FUNCTIONAL SPECIFICATIONS

FINISH OPTIONS	COLOR PIGMENT, SMOOTH, ANTI-SKID
USER CAPACITY	2-3
LOAD CAPACITY	1000-1500 KGS

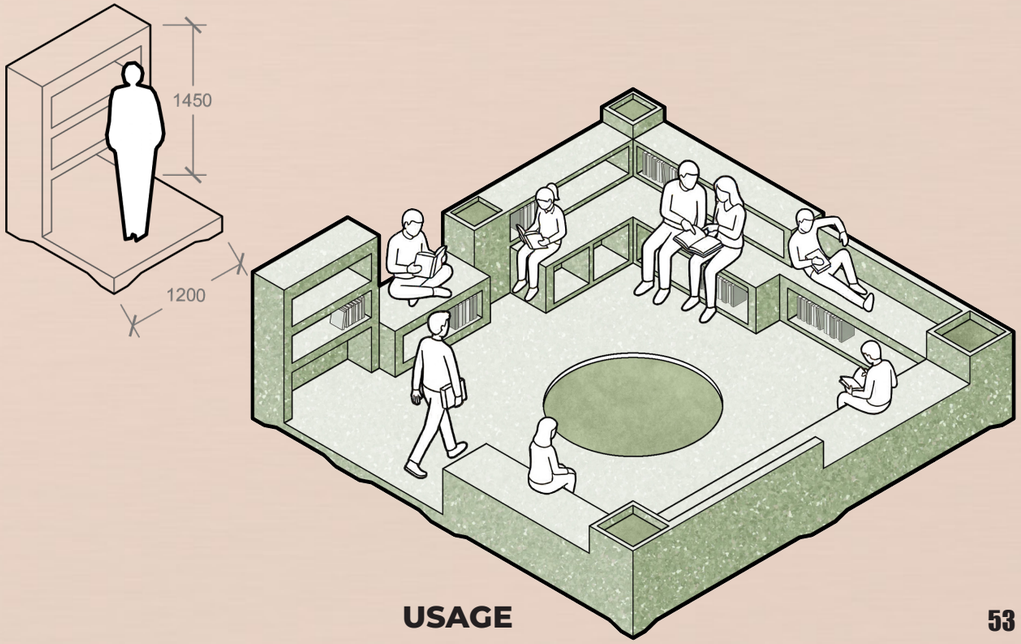

USAGE

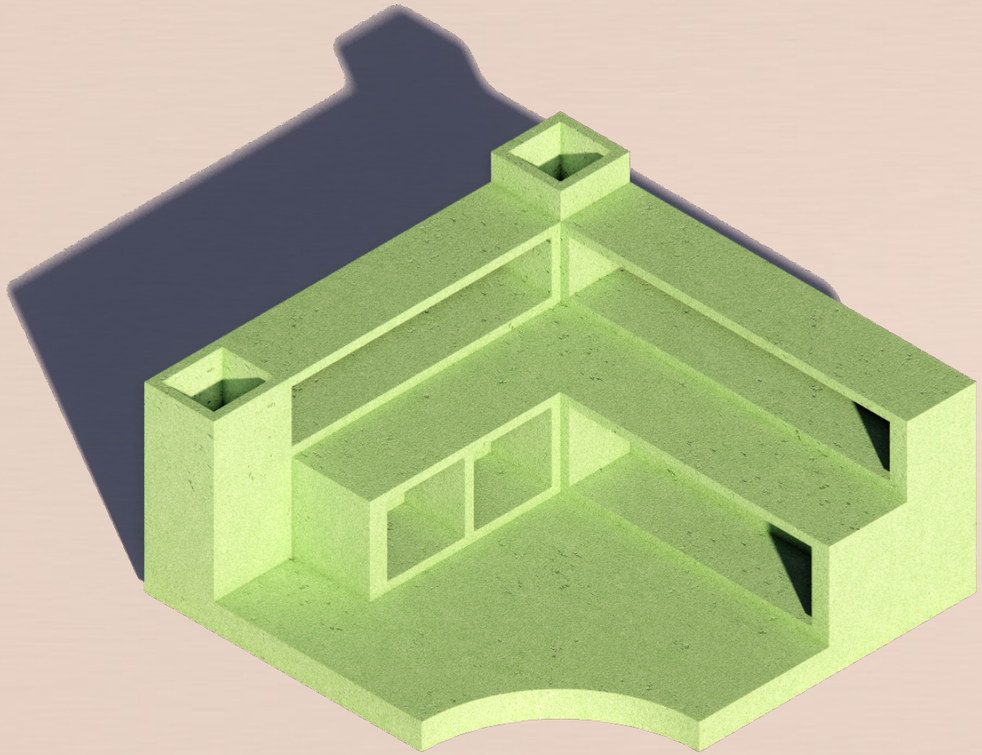

4.3

CORE SPECIFICATIONS

DIMENSIONS	2400MM X 2400MM X 1050MM
WEIGHT	~2.5-3 TONNE
MATERIAL	PRE-CAST RCC
PRICE	₹16,000 – ₹17,500

FUNCTIONAL SPECIFICATIONS

FINISH OPTIONS	COLOR PIGMENT, SMOOTH, ANTI-SKID
USER CAPACITY	6-8
LOAD CAPACITY	2000-3000 KGS

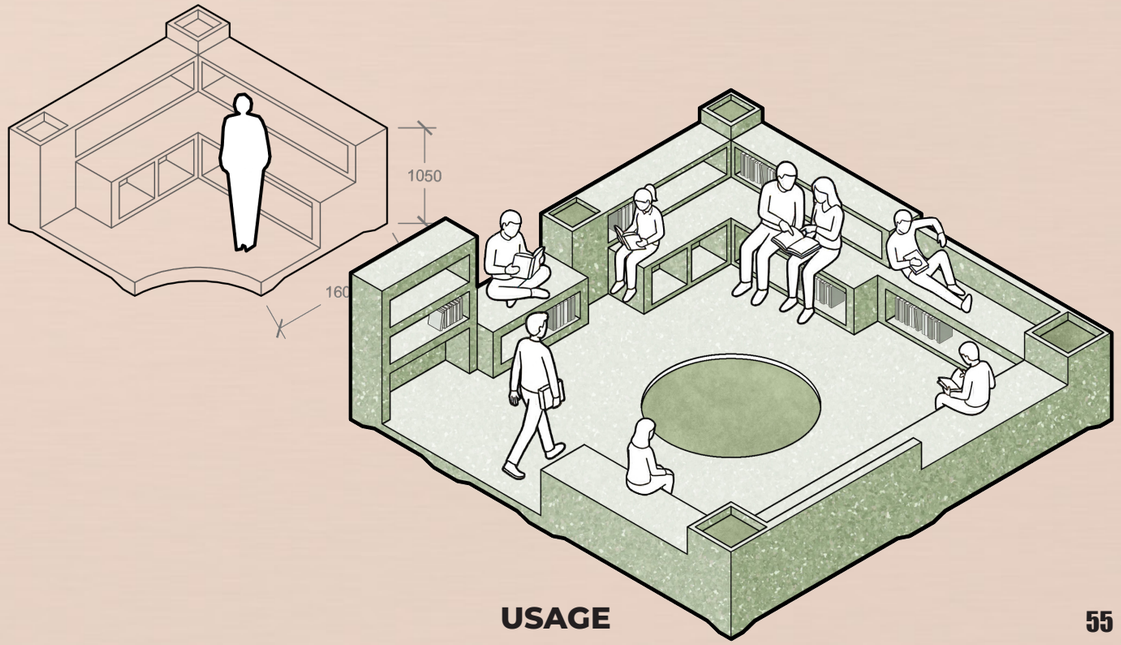

USAGE

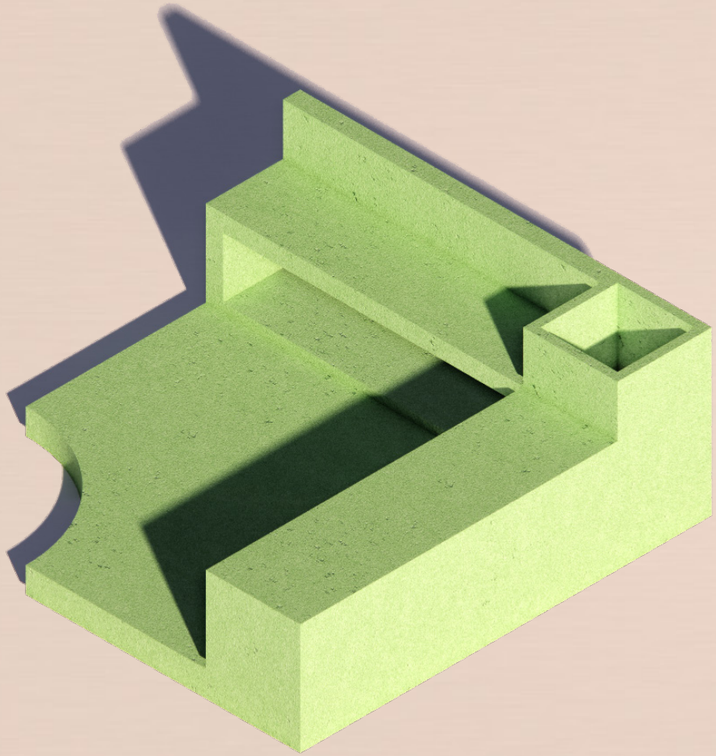

4.4

CORE SPECIFICATIONS

DIMENSIONS	2400MM X 2400MM X 950MM
WEIGHT	~2-2.5 TONNE
MATERIAL	PRE-CAST RCC
PRICE	₹15,000 – ₹16,500

FUNCTIONAL SPECIFICATIONS

FINISH OPTIONS	COLOR PIGMENT, SMOOTH, ANTI-SKID
USER CAPACITY	6-8
LOAD CAPACITY	2000-3000 KGS

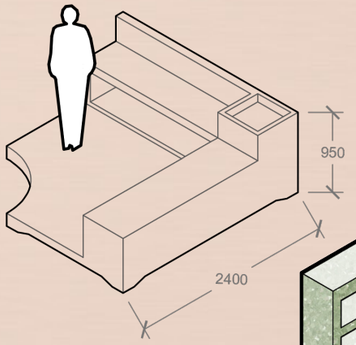

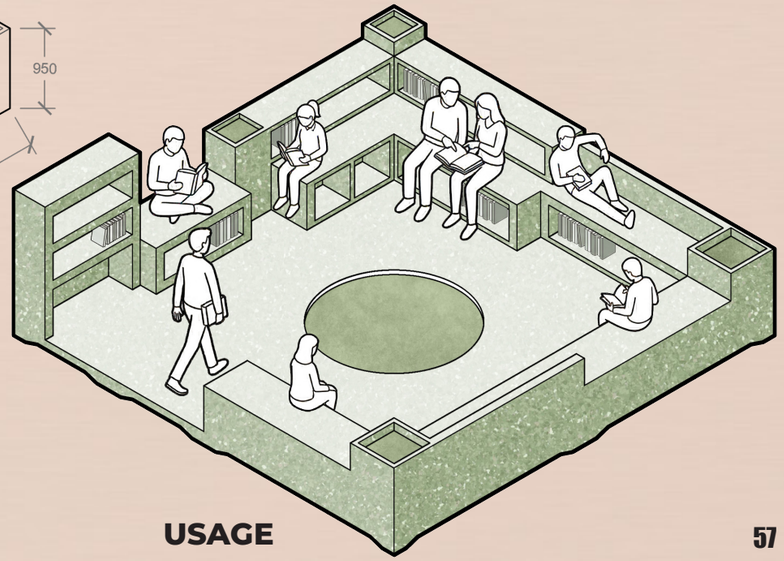

USAGE

5. TO PLAY

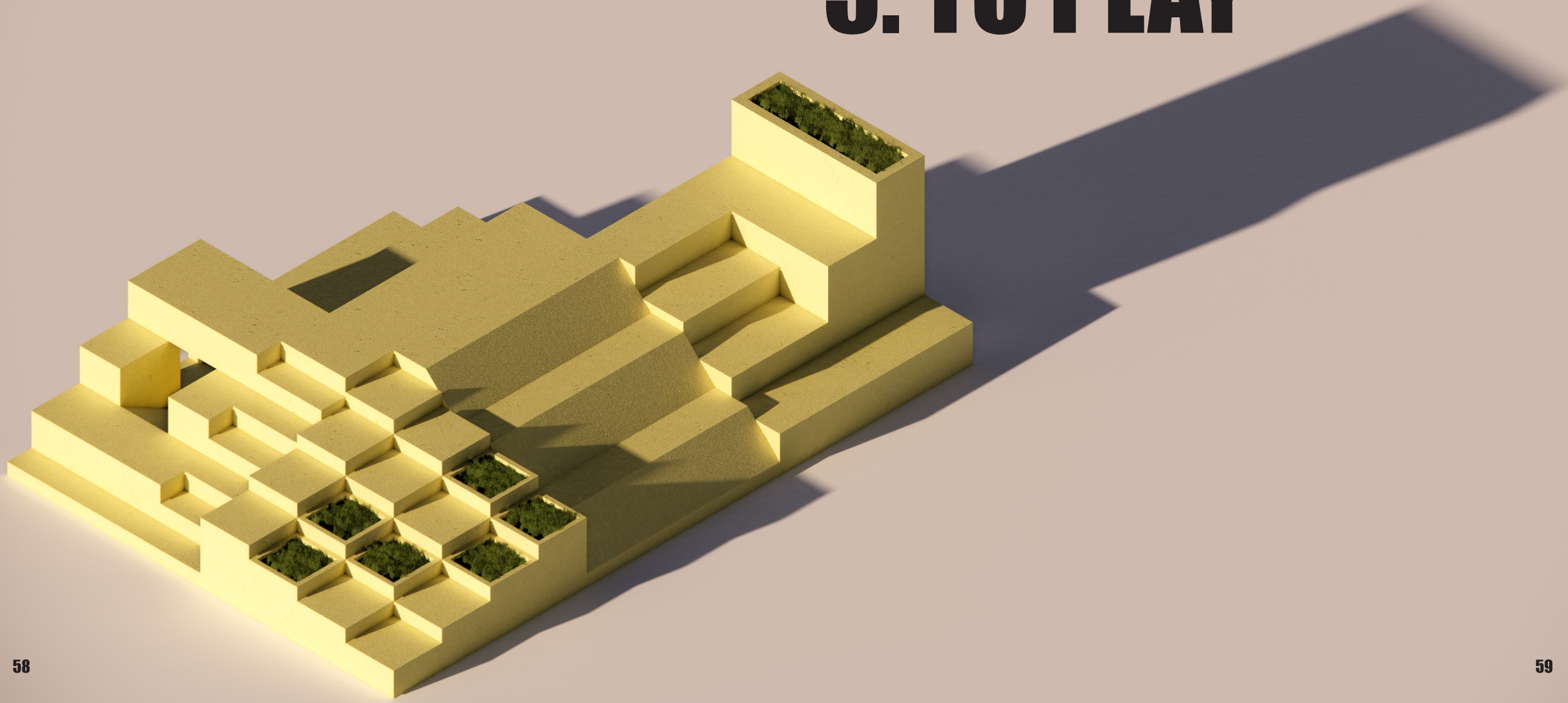

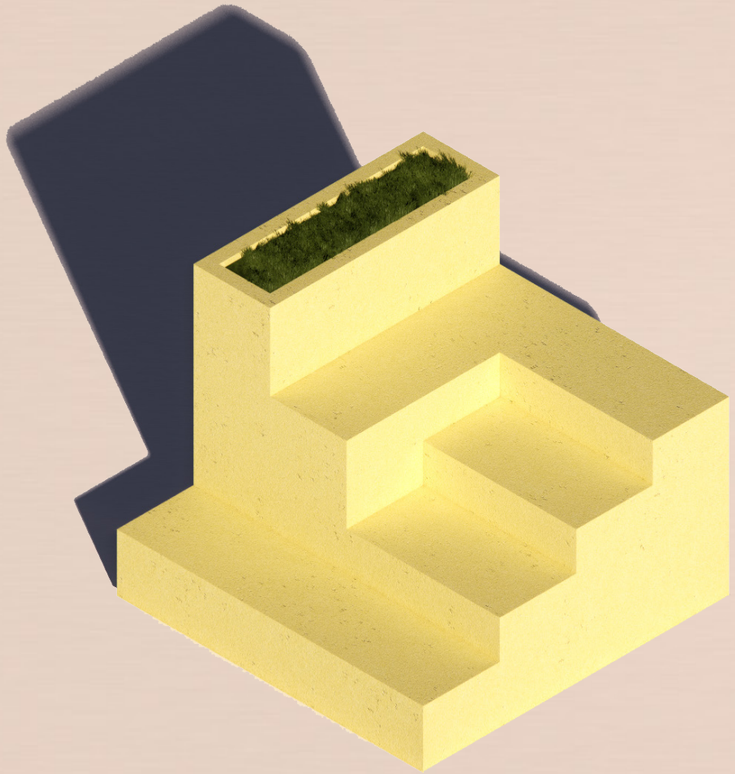

5.1

CORE SPECIFICATIONS

DIMENSIONS	2400MM X 2400MM X 1350MM
WEIGHT	~1.5-2 TONNE
MATERIAL	PRE-CAST RCC
PRICE	₹13,000 – ₹15,500

FUNCTIONAL SPECIFICATIONS

FINISH OPTIONS	COLOR PIGMENT, SMOOTH, ANTI-SKID
USER CAPACITY	6-8
LOAD CAPACITY	2000-3000 KGS

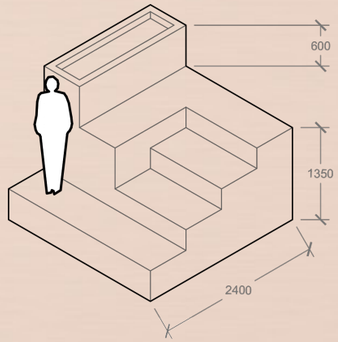

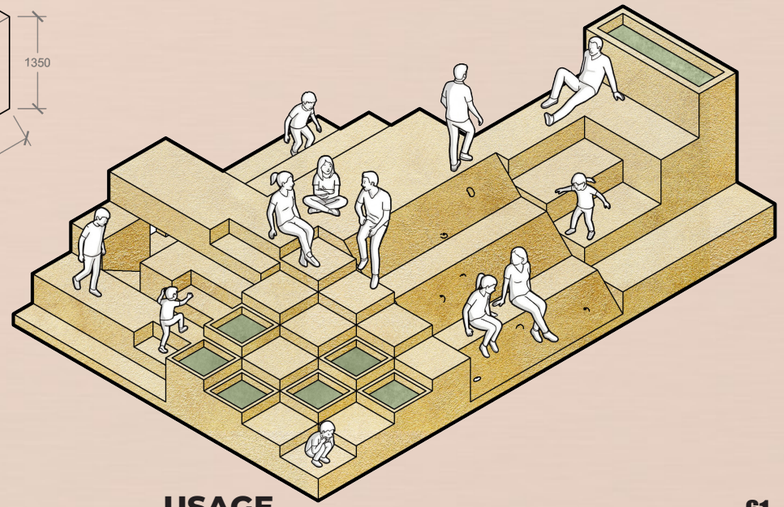

USAGE

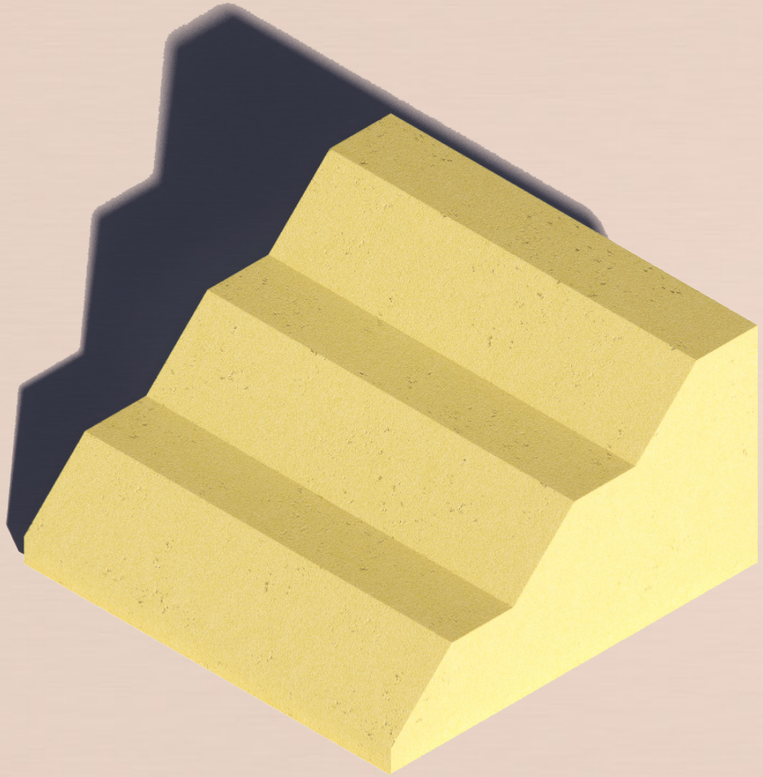

5.2

CORE SPECIFICATIONS

DIMENSIONS	2400MM X 2400MM X 1350MM
WEIGHT	~1.5-2 TONNE
MATERIAL	PRE-CAST RCC
PRICE	₹13,000 – ₹15,500

FUNCTIONAL SPECIFICATIONS

FINISH OPTIONS	COLOR PIGMENT, SMOOTH, ANTI-SKID
USER CAPACITY	6-8
LOAD CAPACITY	2000-3000 KGS

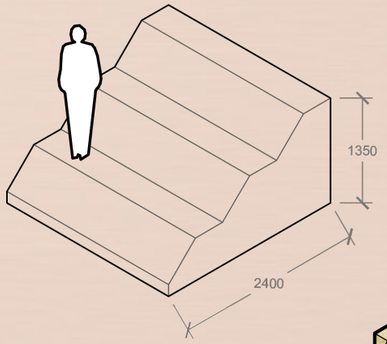

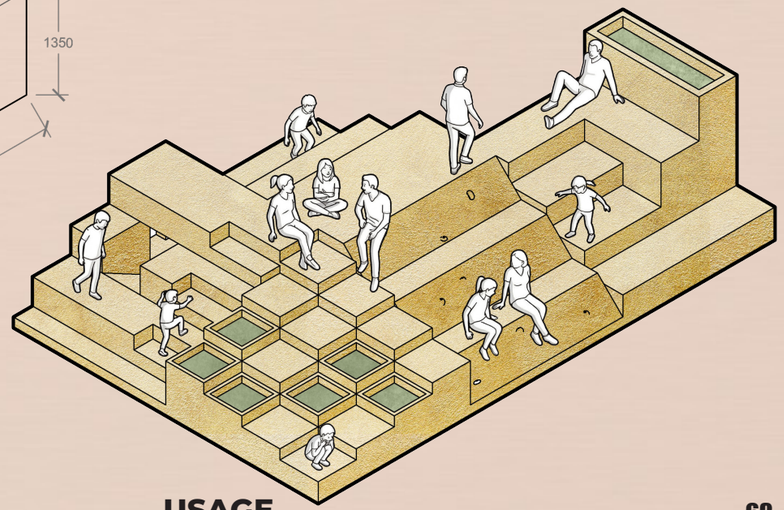

USAGE

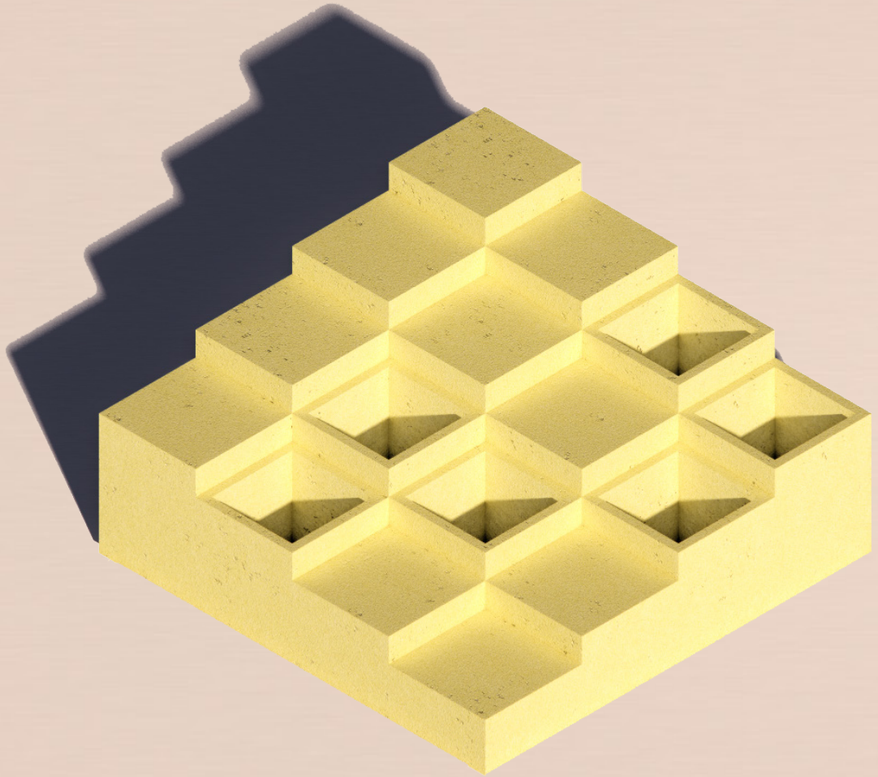

5.3

CORE SPECIFICATIONS

DIMENSIONS	2400MM X 2400MM X 1350MM
WEIGHT	~1.5-2 TONNE
MATERIAL	PRE-CAST RCC
PRICE	₹13,000 – ₹15,500

FUNCTIONAL SPECIFICATIONS

FINISH OPTIONS	COLOR PIGMENT, SMOOTH, ANTI-SKID
USER CAPACITY	6-8
LOAD CAPACITY	2000-3000 KGS

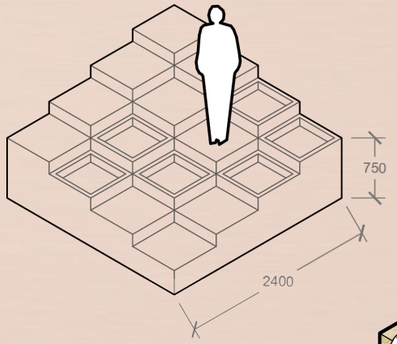

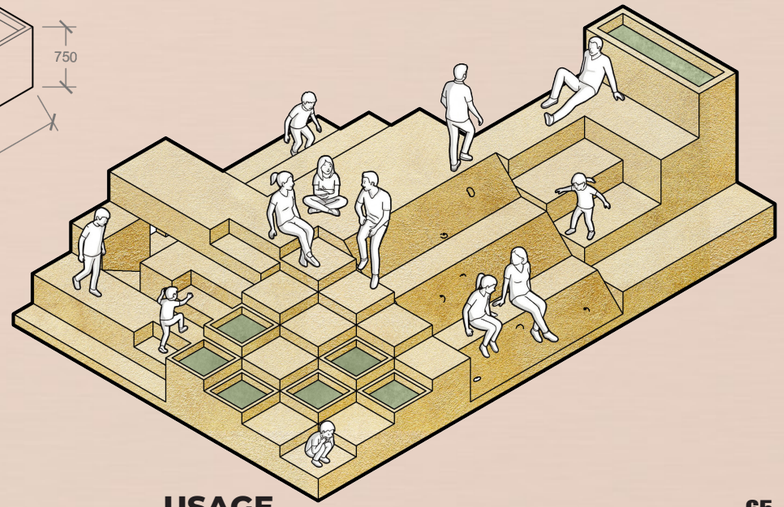

USAGE

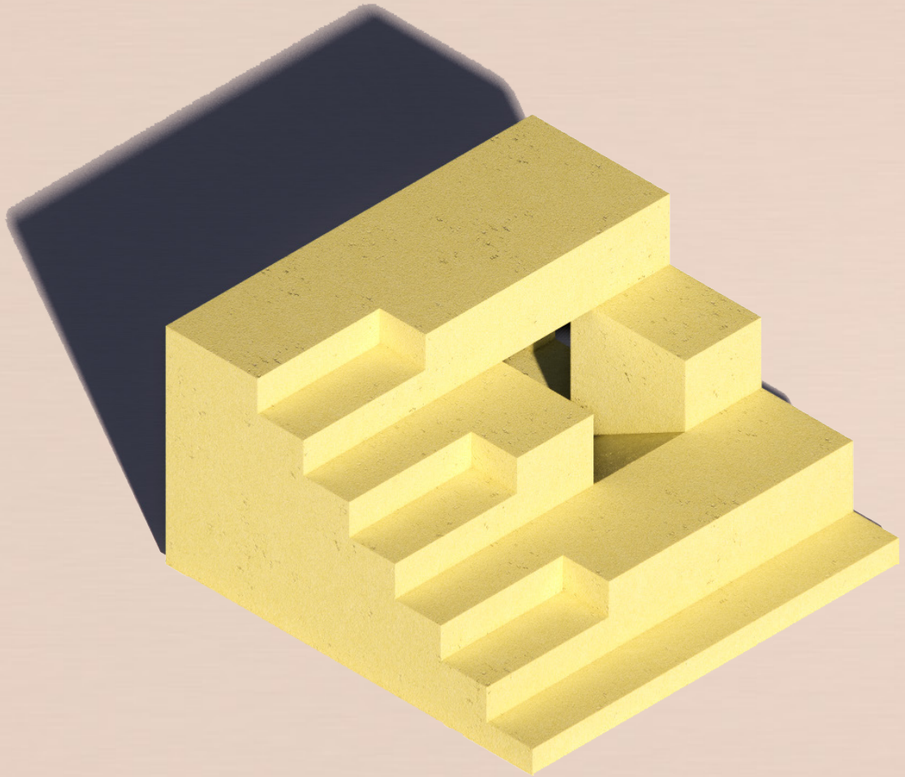

5.4

CORE SPECIFICATIONS

DIMENSIONS	2400MM X 2400MM X 1350MM
WEIGHT	~1.5-2 TONNE
MATERIAL	PRE-CAST RCC
PRICE	₹13,000 – ₹15,500

FUNCTIONAL SPECIFICATIONS

FINISH OPTIONS	COLOR PIGMENT, SMOOTH, ANTI-SKID
USER CAPACITY	6-8
LOAD CAPACITY	2000-3000 KGS

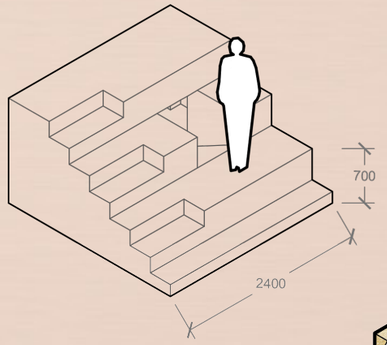

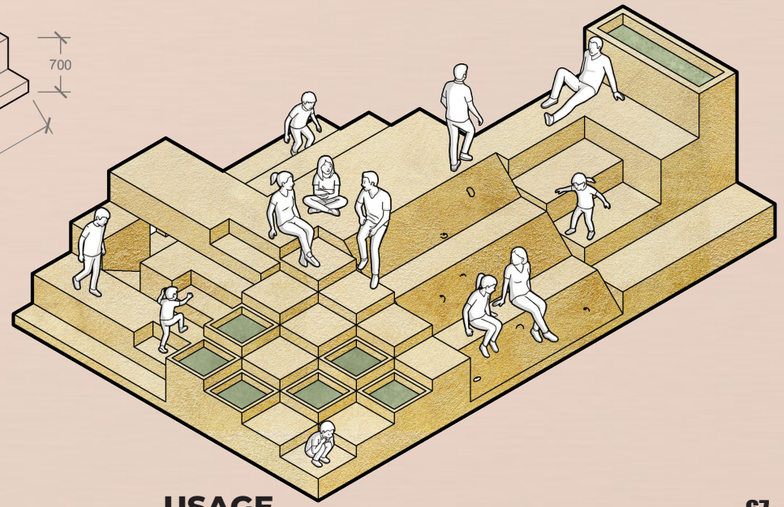

USAGE

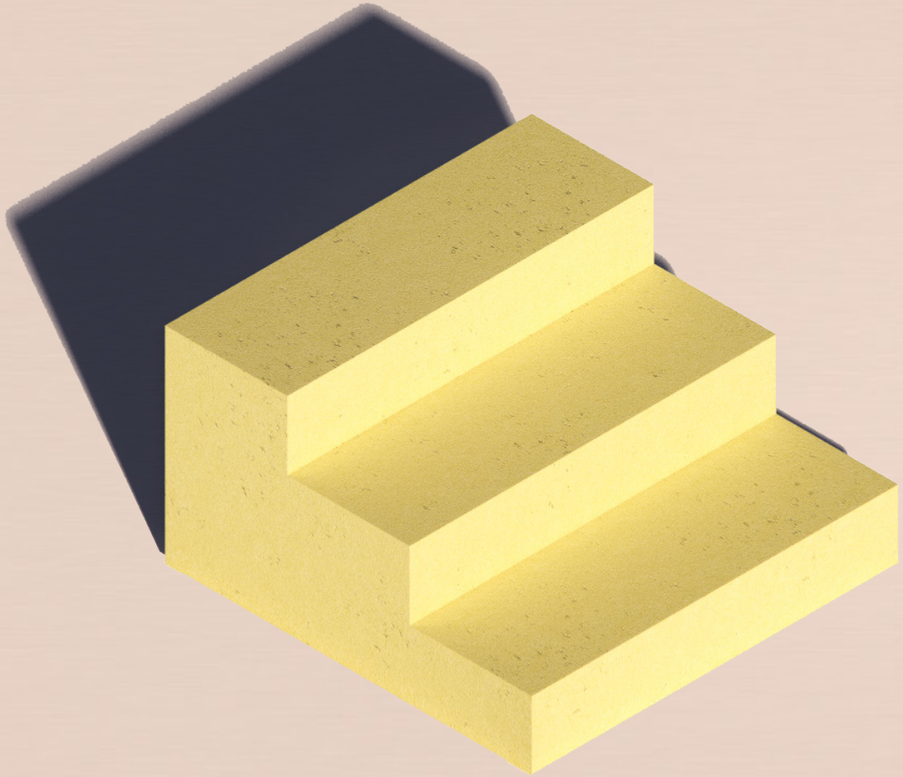

5.5

CORE SPECIFICATIONS

DIMENSIONS	2400MM X 2400MM X 1350MM
WEIGHT	~1.5-2 TONNE
MATERIAL	PRE-CAST RCC
PRICE	₹13,000 – ₹15,500

FUNCTIONAL SPECIFICATIONS

FINISH OPTIONS	COLOR PIGMENT, SMOOTH, ANTI-SKID
USER CAPACITY	6-8
LOAD CAPACITY	2000-3000 KGS

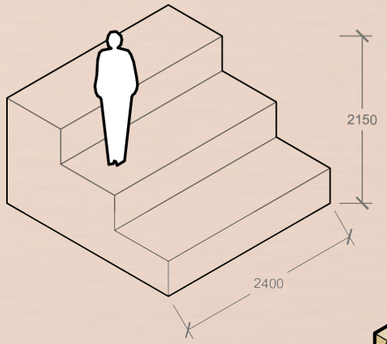

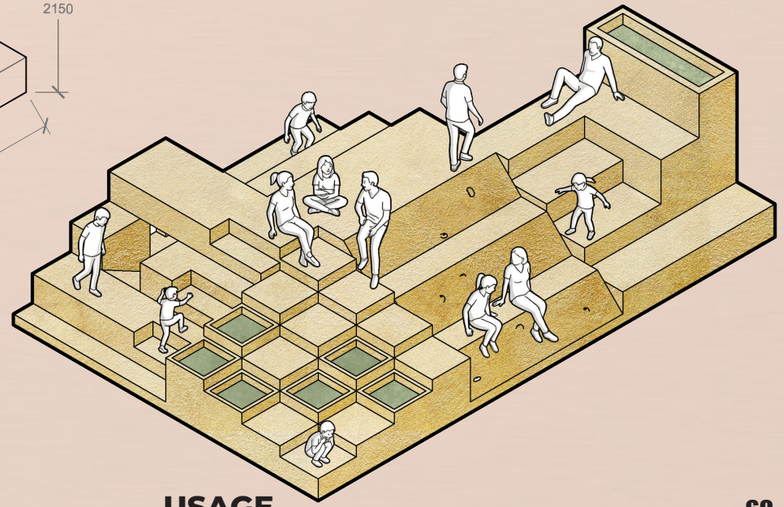

USAGE

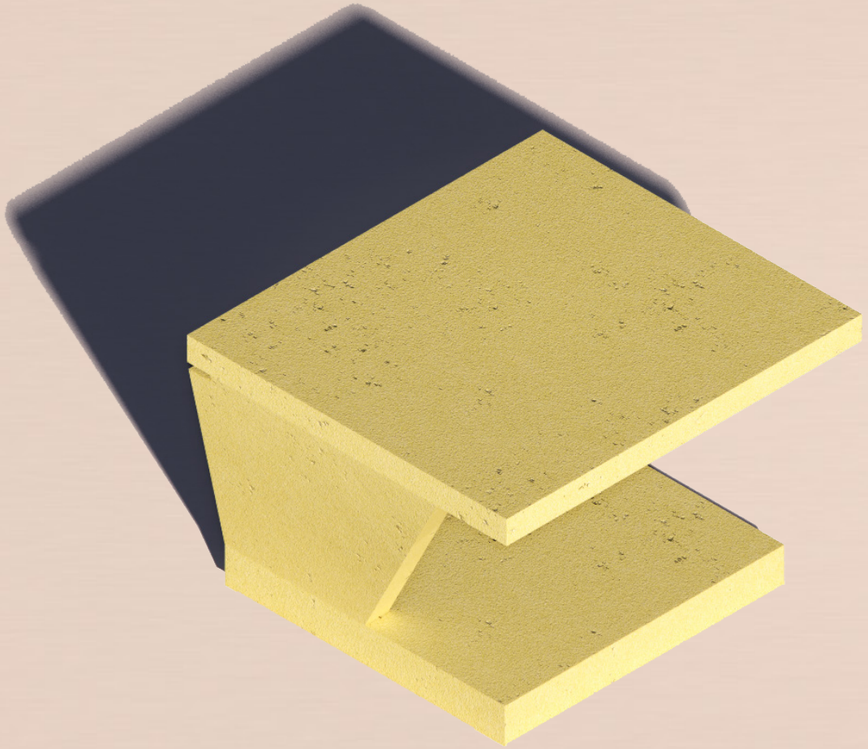

5.6

CORE SPECIFICATIONS

DIMENSIONS	1200MM X 1200MM X 1000MM
WEIGHT	~320-450 KGS
MATERIAL	PRE-CAST RCC
PRICE	₹5,000 – ₹7,500

FUNCTIONAL SPECIFICATIONS

FINISH OPTIONS	COLOR PIGMENT, SMOOTH, ANTI-SKID
USER CAPACITY	1-2
LOAD CAPACITY	800-1200 KGS

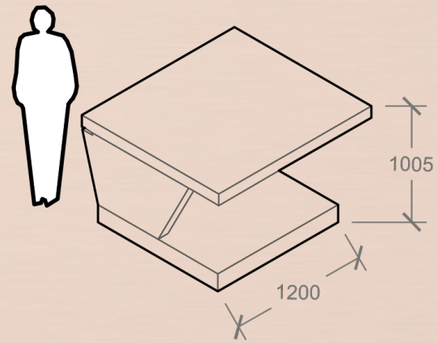

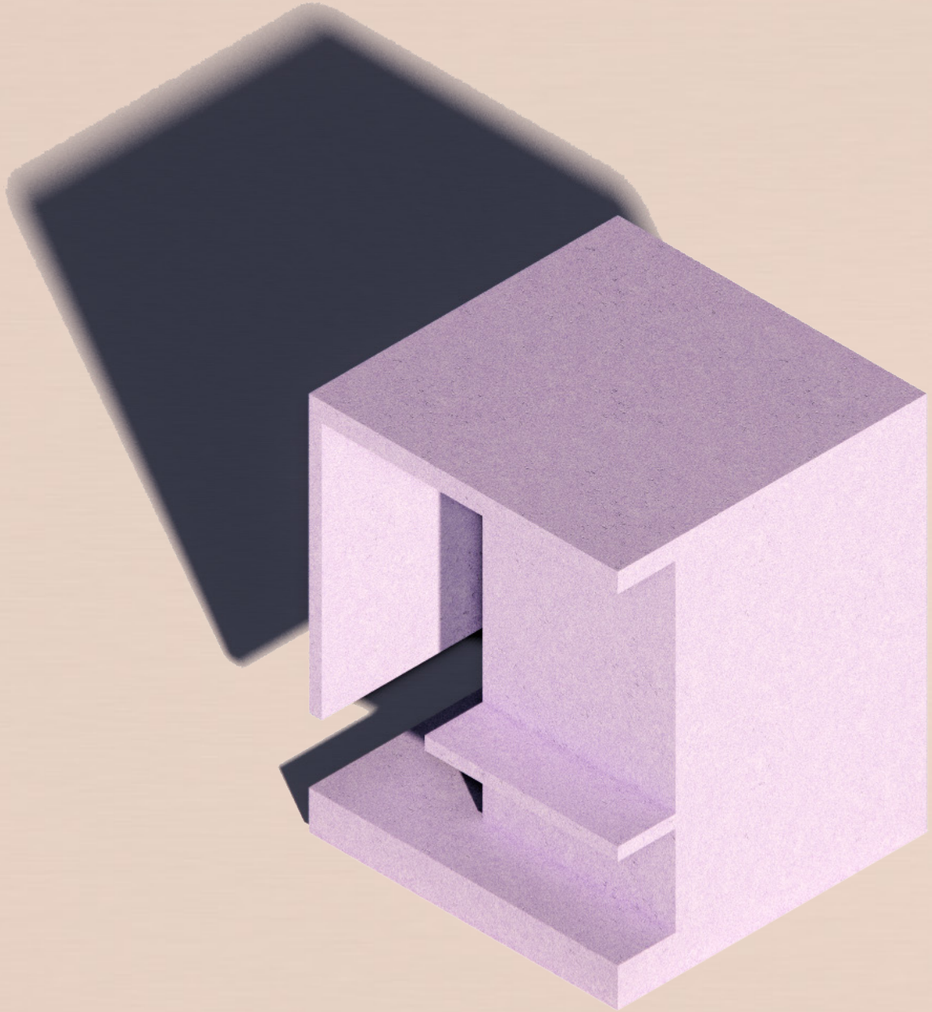

6.1

CORE SPECIFICATIONS

DIMENSIONS	2400MM X 2400MM X 3000MM
WEIGHT	~3-4.5 TONNE
MATERIAL	PRE-CAST RCC
PRICE	₹22,000 – ₹25,500

FUNCTIONAL SPECIFICATIONS

FINISH OPTIONS	COLOR PIGMENT, SMOOTH, ANTI-SKID
USER CAPACITY	1
LOAD CAPACITY	3000-5000 KGS

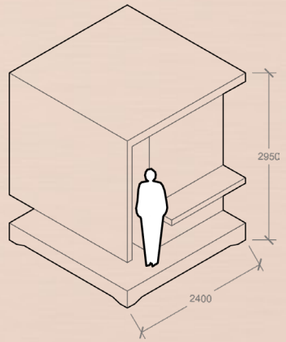

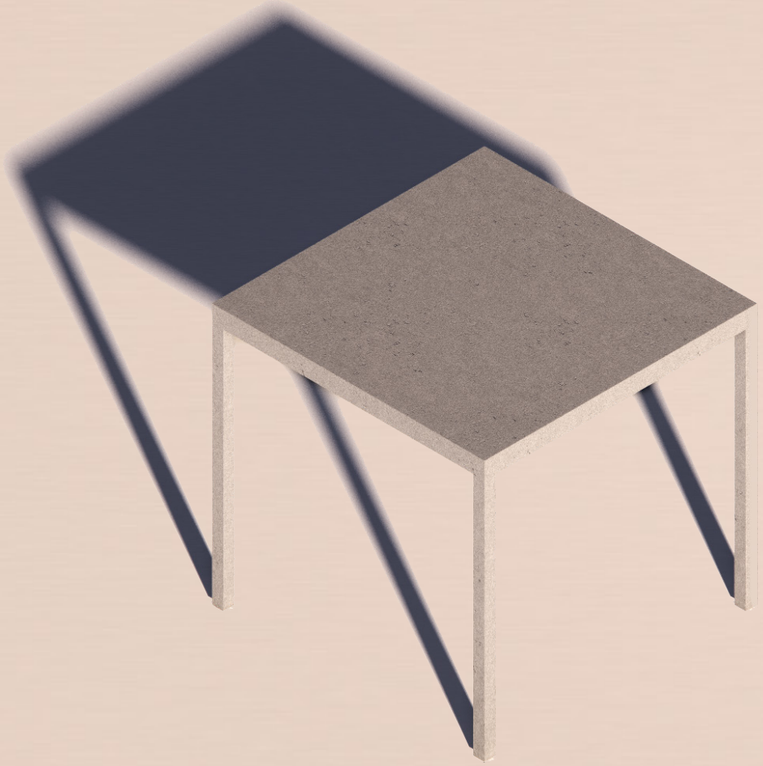

7.1

CORE SPECIFICATIONS

DIMENSIONS	2400MM X 2400MM X 2300MM
WEIGHT	~800-950 KGS
MATERIAL	PRE-CAST RCC
PRICE	₹7,000 – ₹9,500

FUNCTIONAL SPECIFICATIONS

FINISH OPTIONS	COLOR PIGMENT, SMOOTH, ANTI-SKID
USER CAPACITY	4-6
LOAD CAPACITY	2000-3000 KGS

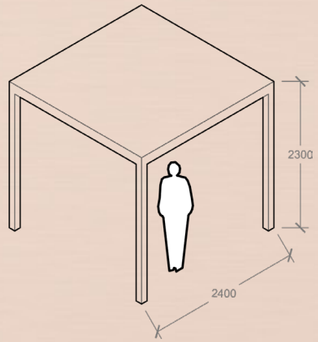

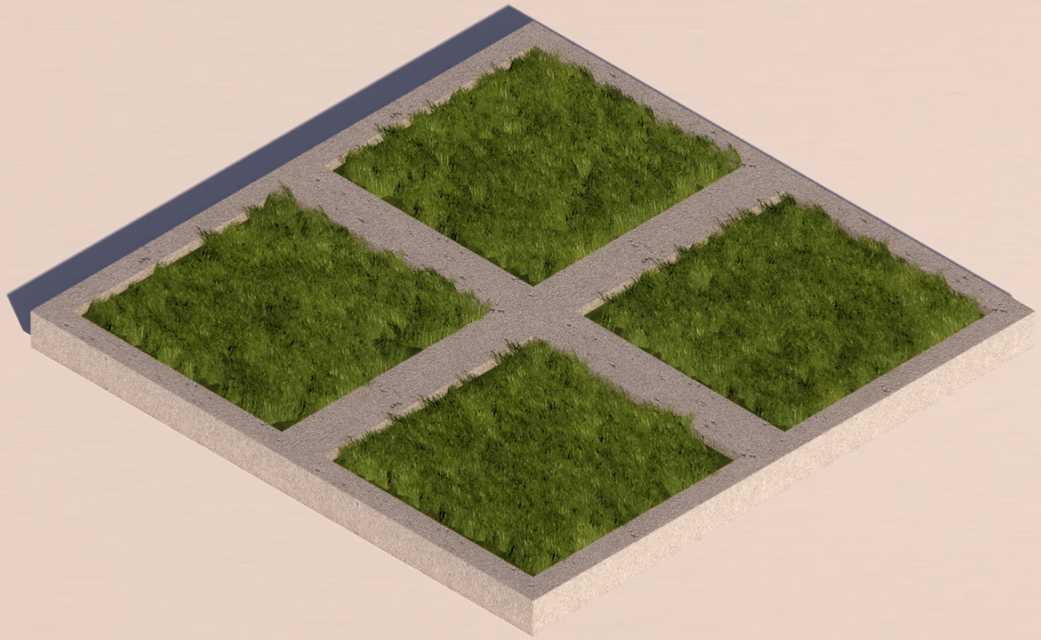

7.2

CORE SPECIFICATIONS

DIMENSIONS	2400MM X 2400MM X 150MM
WEIGHT	~750-900 KGS
MATERIAL	PRE-CAST RCC
PRICE	₹7,000 – ₹9,500

FUNCTIONAL SPECIFICATIONS

FINISH OPTIONS	COLOR PIGMENT, SMOOTH, ANTI-SKID
USER CAPACITY	0
LOAD CAPACITY	500-800 KGS

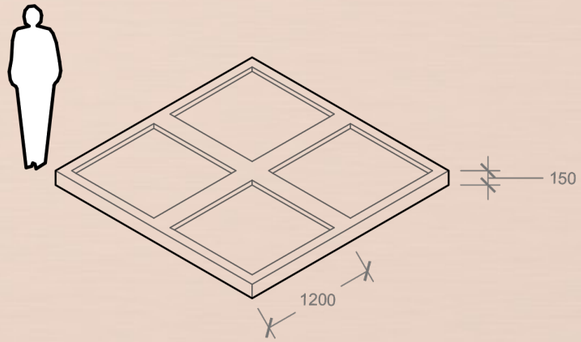

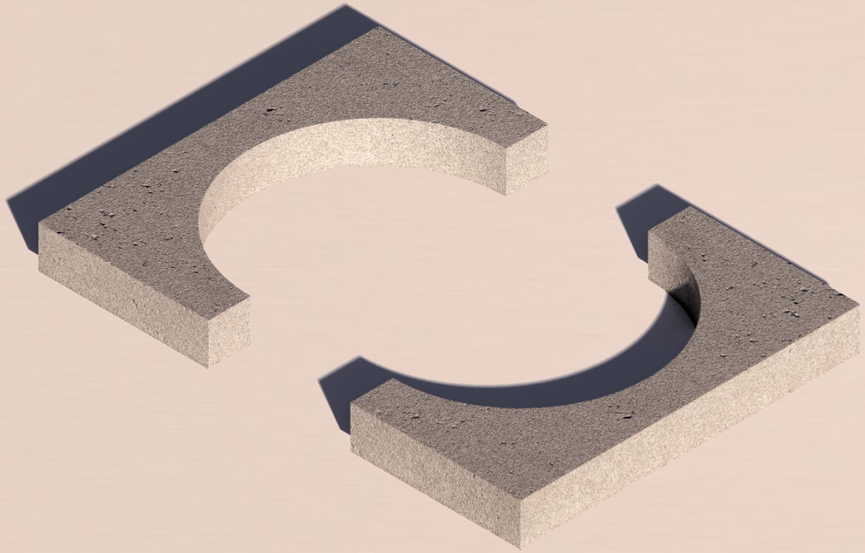

7.3

CORE SPECIFICATIONS

DIMENSIONS	1200MM X 1200MM X 150MM
WEIGHT	~150-200 KGS
MATERIAL	PRE-CAST RCC
PRICE	₹1,000 – ₹2,000

FUNCTIONAL SPECIFICATIONS

FINISH OPTIONS	COLOR PIGMENT
USER CAPACITY	0
LOAD CAPACITY	500-800 KGS

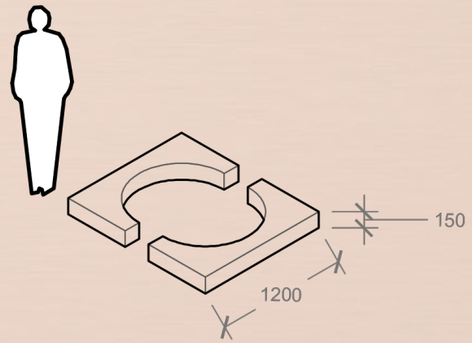

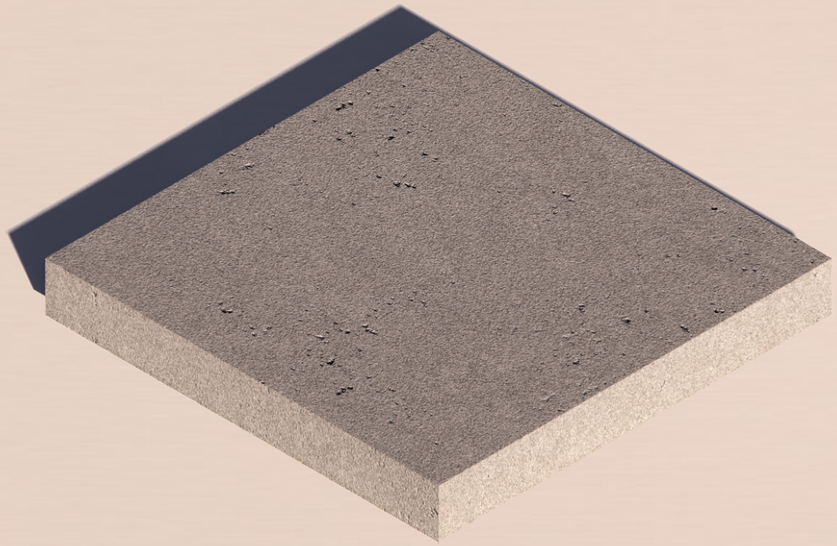

7.4

CORE SPECIFICATIONS

DIMENSIONS	1200MM X 1200MM X 150MM
WEIGHT	~350-450 KGS
MATERIAL	PRE-CAST RCC
PRICE	₹3,000 – ₹4,500

FUNCTIONAL SPECIFICATIONS

FINISH OPTIONS	COLOR PIGMENT
USER CAPACITY	1-2
LOAD CAPACITY	500-800 KGS

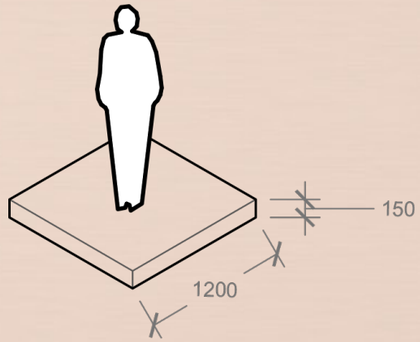

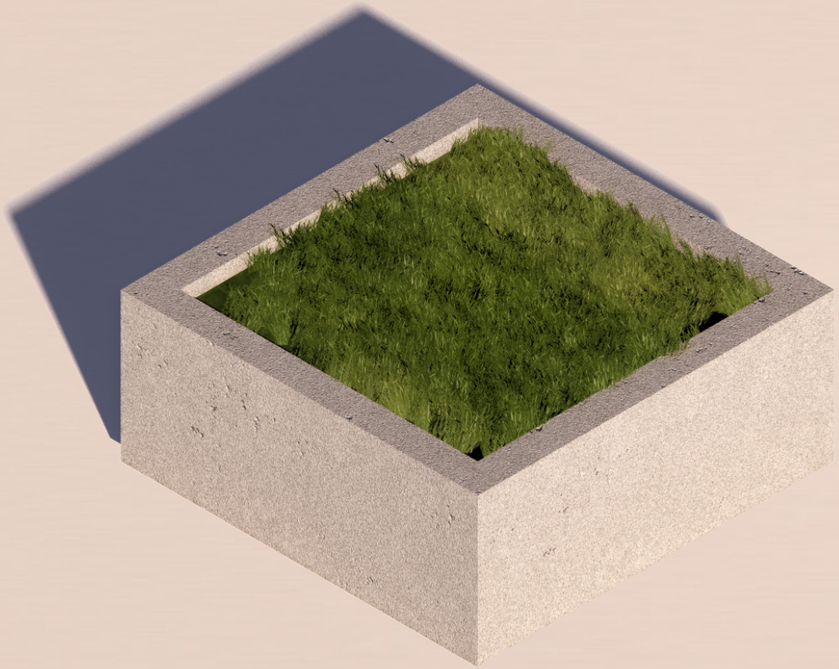

7.5

CORE SPECIFICATIONS

DIMENSIONS	1200MM X 1200MM X 500MM
WEIGHT	~250-300 KGS
MATERIAL	PRE-CAST RCC
PRICE	₹2,000 – ₹3,500

FUNCTIONAL SPECIFICATIONS

FINISH OPTIONS	COLOR PIGMENT
USER CAPACITY	0
LOAD CAPACITY	500-800 KGS

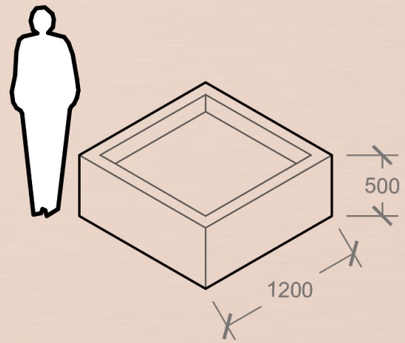

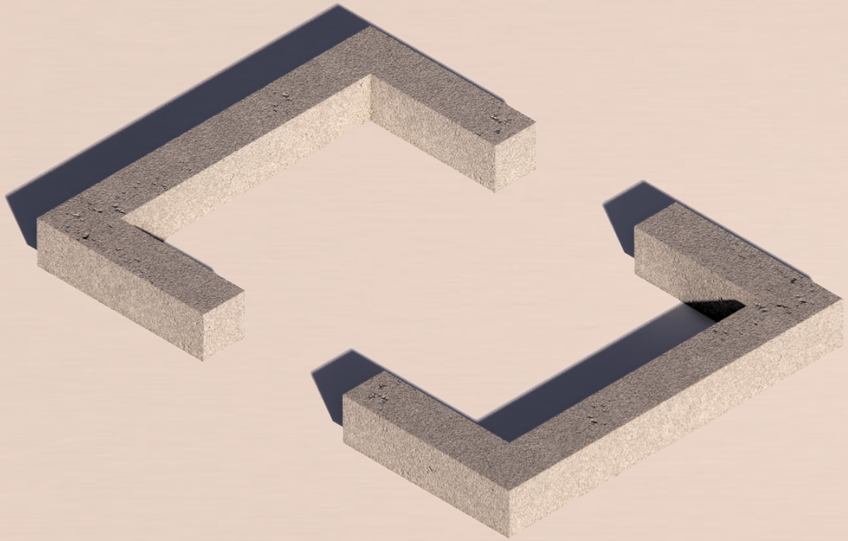

7.6

CORE SPECIFICATIONS

DIMENSIONS	1200MM X 1200MM X 150MM
WEIGHT	~150-200 KGS
MATERIAL	PRE-CAST RCC
PRICE	₹1,000 – ₹2,000

FUNCTIONAL SPECIFICATIONS

FINISH OPTIONS	COLOR PIGMENT
USER CAPACITY	0
LOAD CAPACITY	500-800 KGS

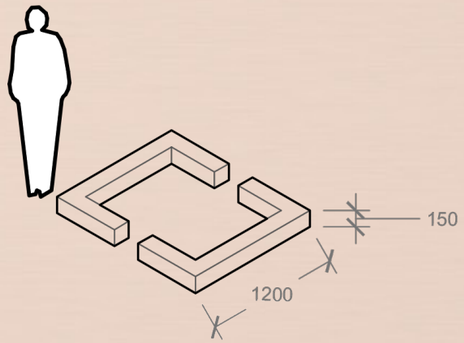

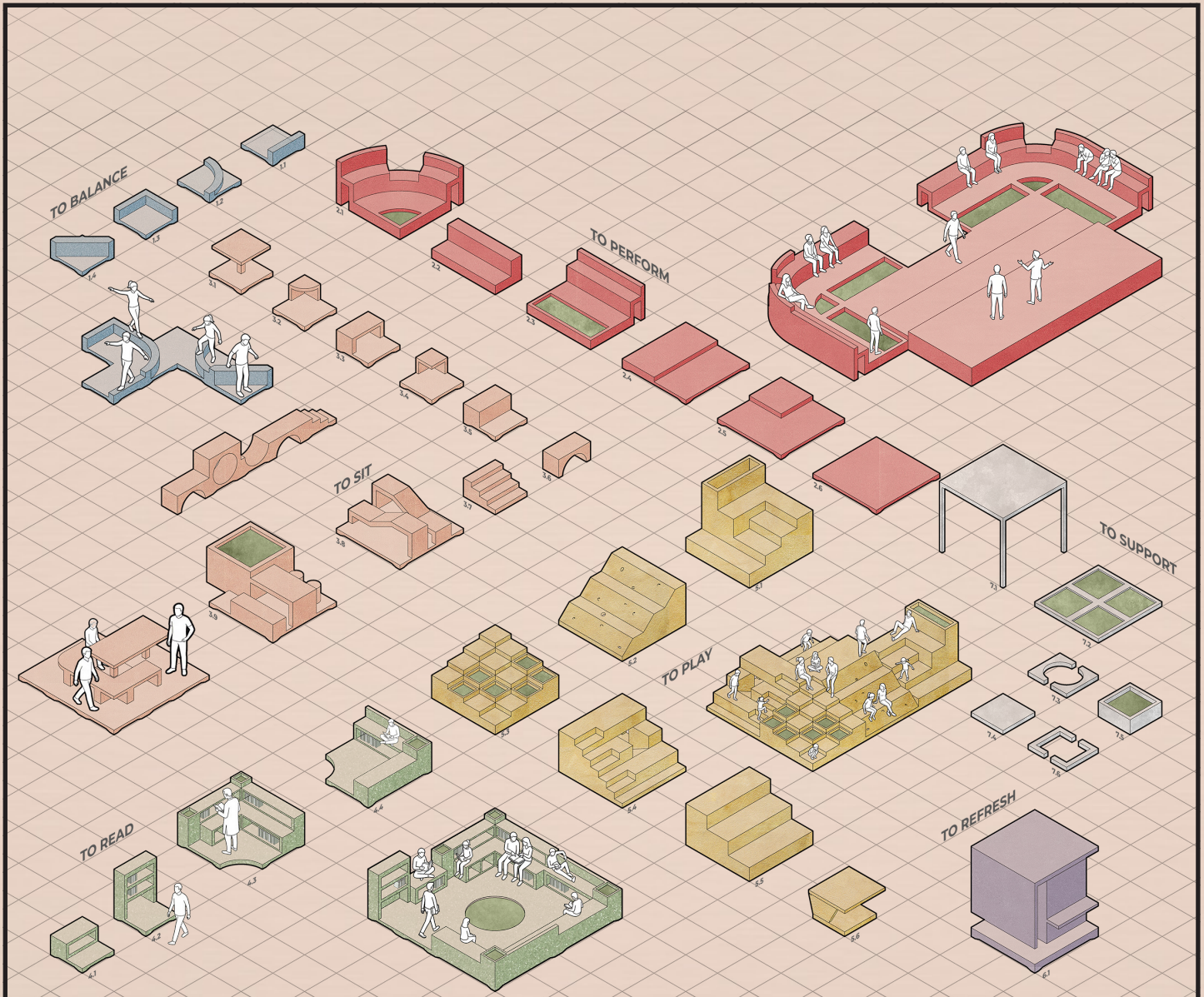

Shreeraj Narwade
School of Environment and Architecture
2025-26